EPSON®
EXCEED YOUR VISION

TM-T88V

User's Manual

M00023801EN

All rights reserved. No part of this publication may be reproduced, stored in a retrieval system, or transmitted in any form or by any means, electronic, mechanical, photocopying, recording, or otherwise, without the prior written permission of Seiko Epson Corporation. No patent liability is assumed with respect to the use of the information contained herein. While every precaution has been taken in the preparation of this book, Seiko Epson Corporation assumes no responsibility for errors or omissions. Neither is any liability assumed for damages resulting from the use of the information contained herein.

Neither Seiko Epson Corporation nor its affiliates shall be liable to the purchaser of this product or third parties for damages, losses, costs, or expenses incurred by purchaser or third parties as a result of: accident, misuse, or abuse of this product or unauthorized modifications, repairs, or alterations to this product, or (excluding the U.S.) failure to strictly comply with Seiko Epson Corporation's operating and maintenance instructions.

Seiko Epson Corporation shall not be liable against any damages or problems arising from the use of any options or any consumable products other than those designated as Original Epson Products or Epson Approved Products by Seiko Epson Corporation.

EPSON is a registered trademark of Seiko Epson Corporation in Japan and other countries/regions.

NOTICE: The contents of this manual are subject to change without notice.

Copyright © 2010 by Seiko Epson Corporation, Nagano, Japan.

Standards and Approvals

The following standards are applied only to the printers that are so labeled. (EMC is tested using the Epson power supplies.)

Europe:	CE marking
North America:	FCC/ICES-003 Class A
Oceania:	AS/NZS CISPR22 Class A

WARNING

This is a Class A product. In a domestic environment this product may cause radio interference in which case the user may be required to take adequate measures.

The connection of a non-shielded printer interface cable to this printer will invalidate the EMC standards of this device. You are cautioned that changes or modifications not expressly approved by Seiko Epson Corporation could void your authority to operate the equipment.

CE Marking

The printer conforms to the following Directives and Norms:

Directive 2004/108/EC	EN 55022 Class A		
	EN 55024		
		IEC 61000-4-2	IEC 61000-4-5
		IEC 61000-4-3	IEC 61000-4-6
		IEC 61000-4-4	IEC 61000-4-11

FCC Compliance Statement For American Users

This equipment has been tested and found to comply with the limits for a Class A digital device, pursuant to Part 15 of the FCC Rules. These limits are designed to provide reasonable protection against harmful interference when the equipment is operated in a commercial environment.

This equipment generates, uses, and can radiate radio frequency energy and, if not installed and used in accordance with the instruction manual, may cause harmful interference to radio communications.

Operation of this equipment in a residential area is likely to cause harmful interference, in which case the user will be required to correct the interference at his own expense.

For Canadian Users

This Class A digital apparatus complies with Canadian ICES-003.

Important Safety Information

This section presents important information intended to ensure safe and effective use of this product. Read this section carefully and store it in an accessible location.

Key to Symbols

The symbols in this manual are identified by their level of importance, as defined below. Read the following carefully before handling the product.

⚠ ***WARNING:***
Warnings must be followed carefully to avoid serious bodily injury.

⚠ ***CAUTION:***
Cautions must be observed to avoid minor injury to yourself, damage to your equipment, or loss of data.

Safety Precautions

⚠ ***WARNING:***
Shut down your equipment immediately if it produces smoke, a strange odor, or unusual noise. Continued use may lead to fire. Immediately unplug the equipment and contact your dealer or a Seiko Epson service center for advice.

Never attempt to repair this product yourself. Improper repair work can be dangerous.

Never disassemble or modify this product. Tampering with this product may result in injury or fire.

Be sure to use the specified power source. Connection to an improper power source may cause fire.

Do not allow foreign matter to fall into the equipment. Penetration by foreign objects may lead to fire.

If water or other liquid spills into this equipment, unplug the power cord immediately, and then contact your dealer or a Seiko Epson service center for advice. Continued usage may lead to fire.

If you open the DIP switch cover, be sure to close the cover and tighten the screw after adjusting the DIP switch. Using this product with the cover open may cause fire or electric shock.

Do not use aerosol sprayers containing flammable gas inside or around this product. Doing so may cause fire.

Do not connect a telephone line to the drawer kick-out connector; otherwise the printer and the telephone line may be damaged.

⚠ ***CAUTION:***
Do not connect cables in ways other than those mentioned in this manual. Different connections may cause equipment damage and burning.

Be sure to set this equipment on a firm, stable, horizontal surface. The product may break or cause injury if it falls.

Do not use in locations subject to high humidity or dust levels. Excessive humidity and dust may cause equipment damage or fire.

Do not place heavy objects on top of this product. Never stand or lean on this product. Equipment may fall or collapse, causing breakage and possible injury.

Take care not to injure your fingers on the manual cutter

- *When you remove printed paper*
- *When you perform other operations such as loading/replacing roll paper*

To ensure safety, unplug this product before leaving it unused for an extended period.

Caution Labels

The caution labels on the product indicate the following precautions.

⚠ ♨ **CAUTION:**
Do not touch the thermal head and the frame on its side because it can be very hot after printing.

⚠ **CAUTION:**
Touching the manual cutter may cause injury.

Restriction of Use

When this product is used for applications requiring high reliability/safety, such as transportation devices related to aviation, rail, marine, automotive, etc.; disaster prevention devices; various safety devices, etc.; or functional/precision devices, etc.; you should use this product only after giving consideration to including fail-safes and redundancies into your design to maintain safety and total system reliability. Because this product was not intended for use in applications requiring extremely high reliability/safety, such as aerospace equipment, main communication equipment, nuclear power control equipment, or medical equipment related to direct medical care, etc., please make your own judgment on this product's suitability after a full evaluation.

Unpacking

The following items are included with the standard specification printer.
If any item is damaged, contact your dealer.

- ❑ Printer
- ❑ Connector cover
- ❑ Roll paper guide*
- ❑ Screw*
- ❑ AC cable*
- ❑ Setup Guide
- ❑ Roll paper
- ❑ Power switch cover
- ❑ Strips for 58 mm paper width × 2*
- ❑ AC adapter*
- ❑ Warranty certificate*
- ❑ TM-T88V Software & Documents Disc

** May not be included depending on the printer model.*

Downloading Drivers, Utilities, and Manuals

The latest versions of drivers, utilities, and manuals can be downloaded from one of the following URLs.

For customers in North America, go to the following web site:
http://www.epsonexpert.com/ and follow the on-screen instructions.

For customers in other countries, go to the following web site:
http://www.epson-pos.com/

Precautions When Installing the Power Supply Cover

A description of EMI standards is on the bottom of the printer. When the optional power supply cover (OT-BX88V) is installed, it is hard to check it. In such case, uninstall the power supply cover if necessary.

Part Names

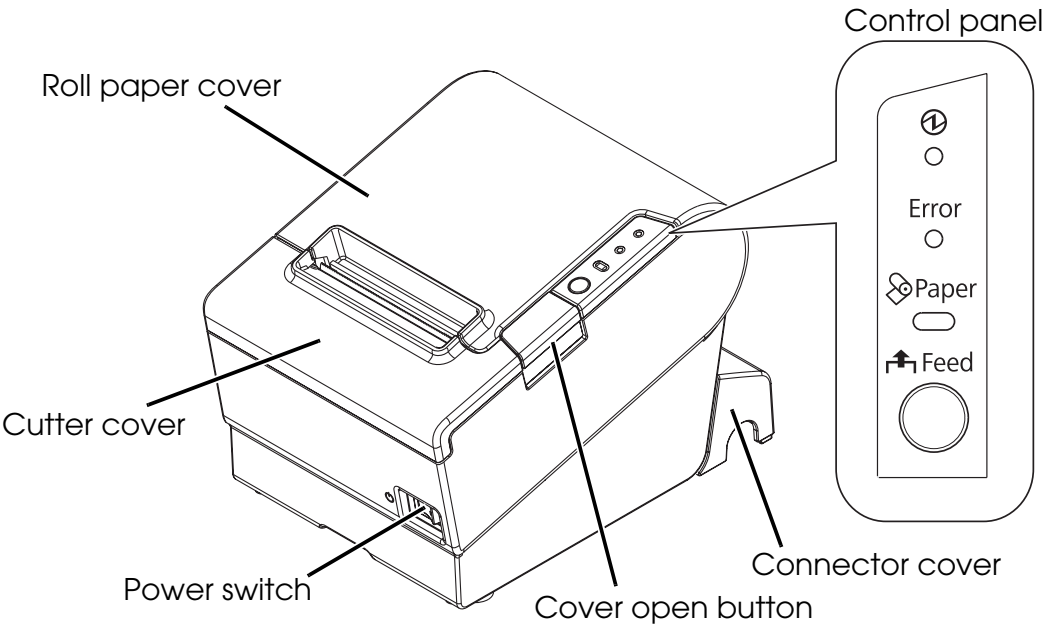

Control Panel

(Power) LED

This LED is on when the printer is on.

Error LED

This indicates an error.

Paper LED

On indicates a paper near end or out. Flashing indicates standby.

Feed button

This button feeds paper.

Installing the Printer Horizontally or Vertically

You can install the printer horizontally on a flat surface (with the paper exit on top) or vertically (with the paper exit at the front) by hanging it on a wall, using the optional WH-10 hanging bracket set.

⚠ ***WARNING:***

When hanging the printer on the wall with the hanging bracket set, be sure to attach a connector cover to the printer.

Setting Up the Printer

To set up the printer, follow the steps below.

1. Connect the cables.
2. Attach the connector cover.
3. Arrange the cables.
4. Install the roll paper.

Connecting the Cables

⚠ ***CAUTION:***

For a serial interface, use a null modem cable.

For a parallel interface, use an IEEE 1284 cable.

For a USB interface, do not turn on the printer before installing the printer driver.

1. Make sure the printer is turned off.
2. Connect the power cord and each interface cable to the connectors on the printer back. For the shape of each connector, see the illustration below. (Mounted interfaces vary by the printer model.)

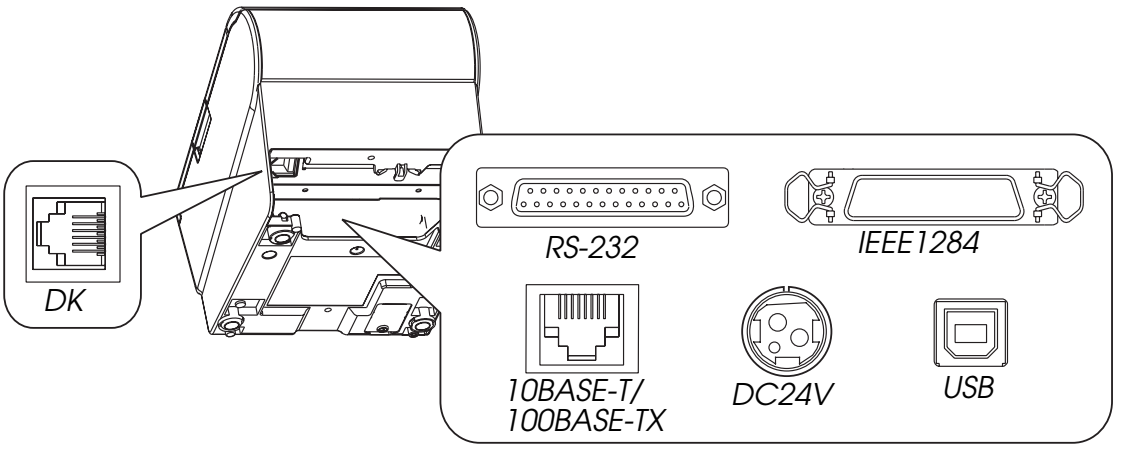

3. Connect the interface cable to the computer.
4. Insert the power cord plug into a socket.

Attaching the Connector Cover

Follow the steps below to attach the connector cover to protect the cables.

1. Turn over the printer.
2. Position the two hooks on both sides of the connector cover so that they hook the printer case.
3. Push the connector cover down to click onto the printer case.

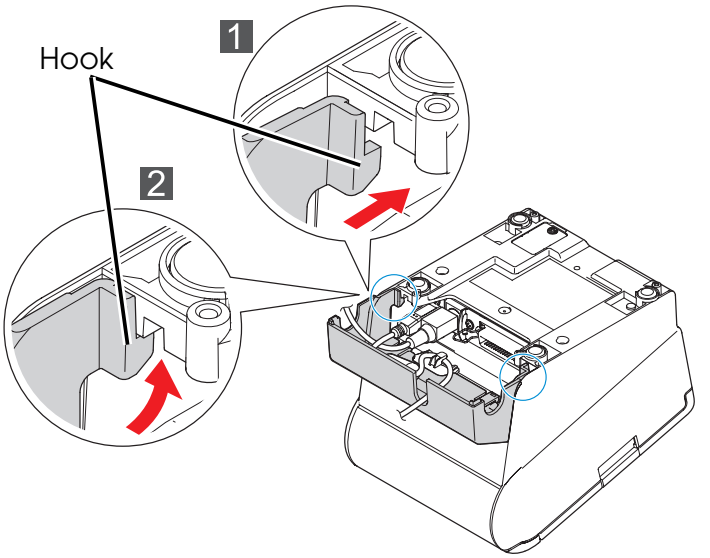

To remove the connector cover, turn the printer over, and push the connector cover down while pushing both sides of the connector cover inward to detach the hooks from the printer case.

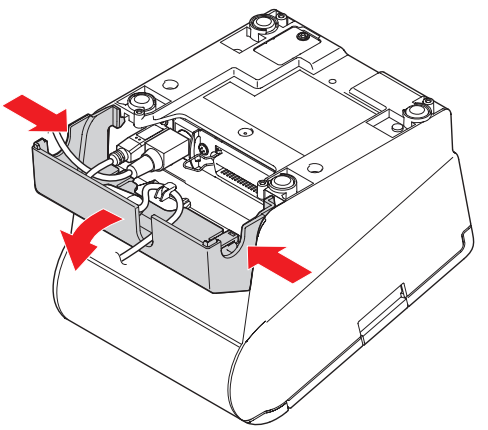

Arranging the Cables

Pass the cables through cable exits in the connector cover. The connector cover has cable exits on the back and both sides.

You can also route the serial, USB, or power cables out the front by passing them through the notch in the printer bottom.

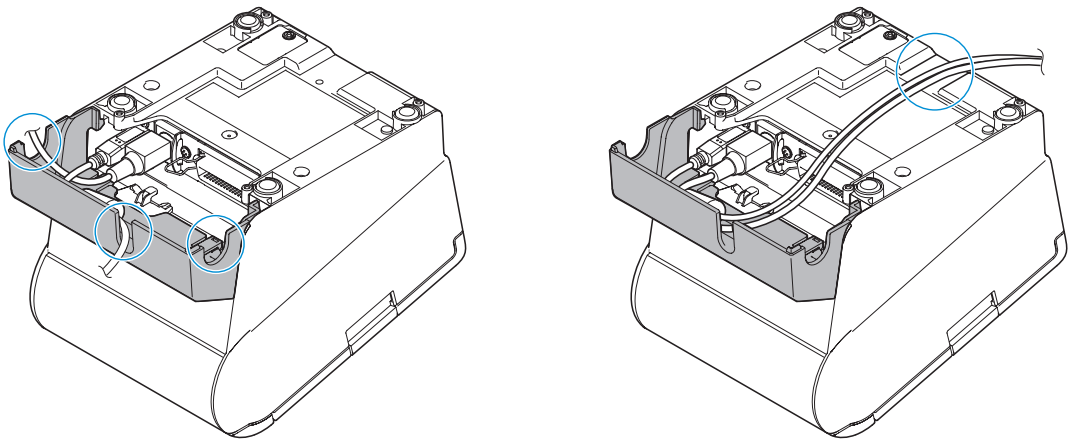

If you want to pass the USB cable through the cable exit on the back, fit the cable under the hook on the printer to prevent the cable from coming off.

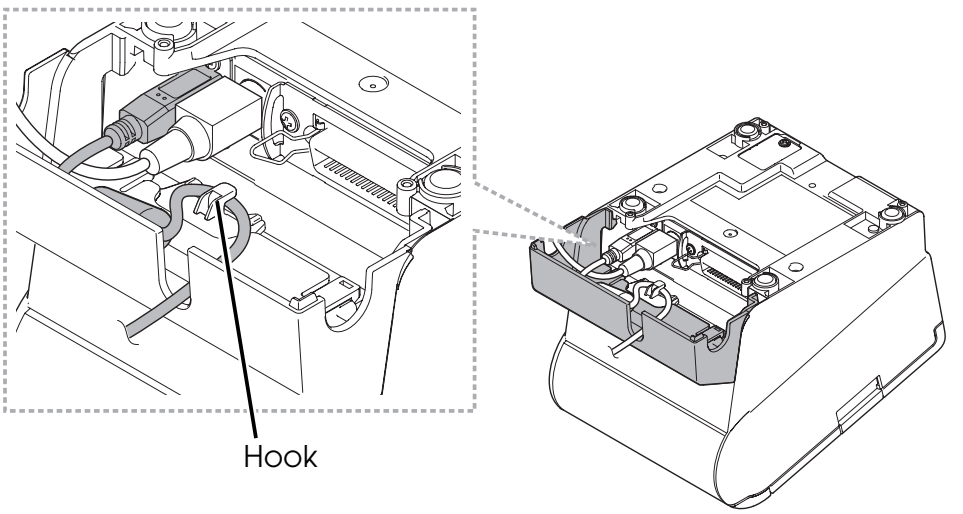

After the cable arrangement, turn over the printer, and make sure the cables are not pinched.

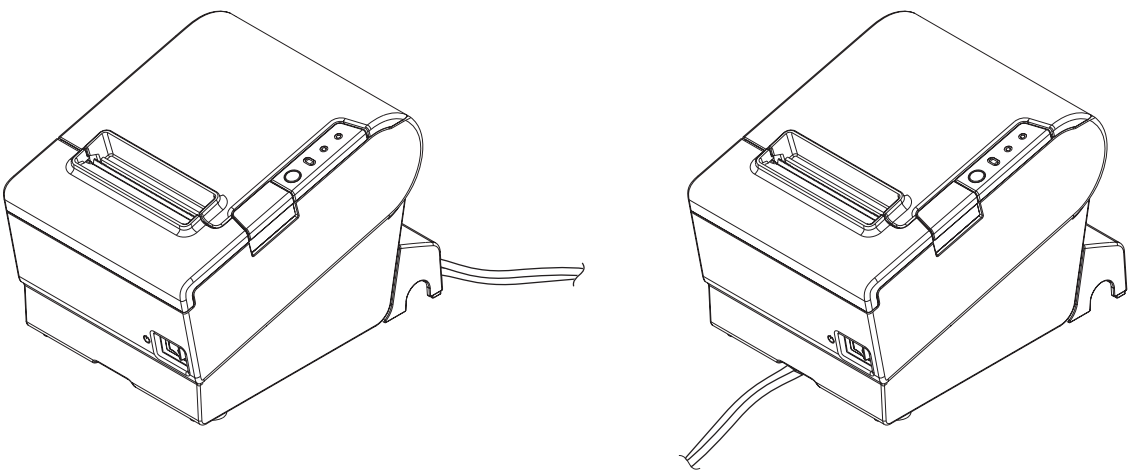

Installing Roll Paper

Follow the steps below to install the roll paper. If you want to change the paper width by using the roll paper guide, see "Changing the Paper Width" on page 11.

1. Press the cover open button to open the roll paper cover.

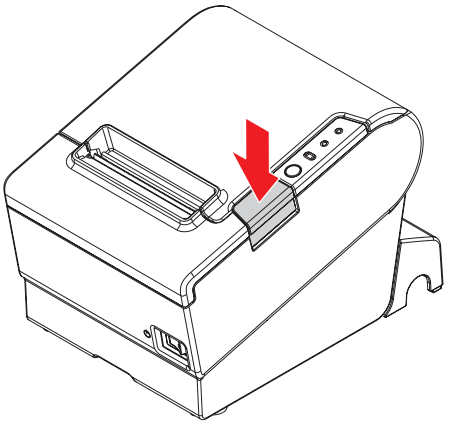

2. Remove the used roll paper core if any, and insert the roll paper. The correct direction of the paper is shown in the illustration below.

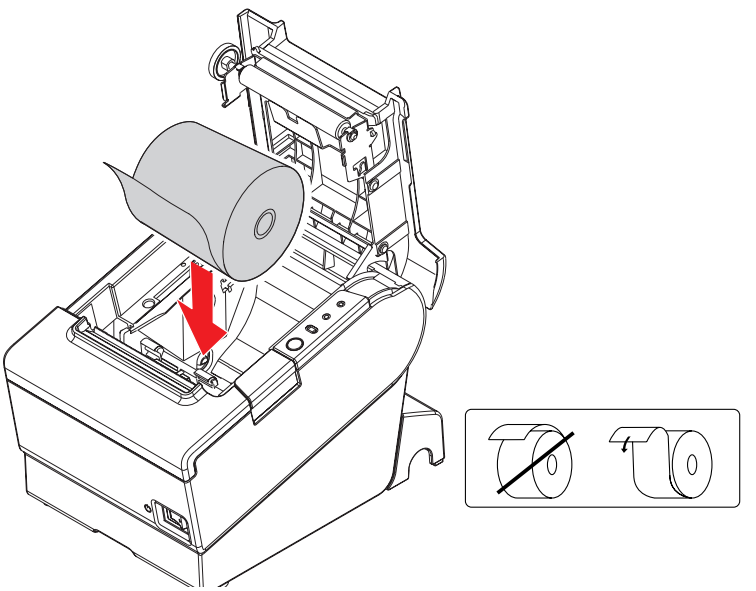

3. Pull out some paper, and close the roll paper cover.

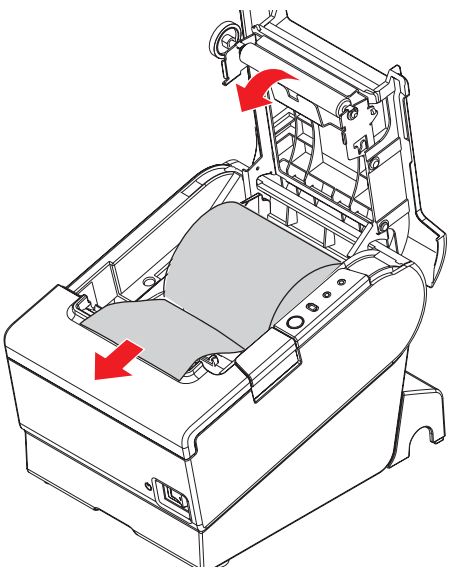

4. Tear off the paper.

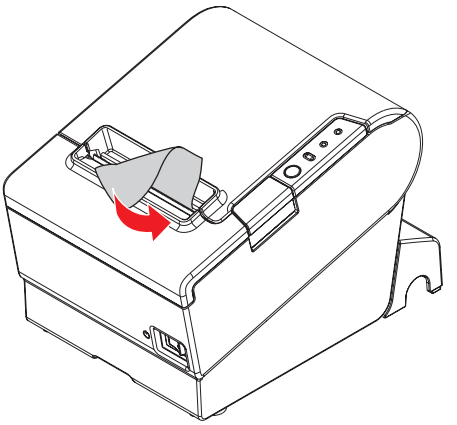

Attaching the Power Switch Cover

The enclosed power switch cover ensures that the power switch is not pressed accidentally. You can turn on and off the power switch by inserting a sharp-pointed object in the holes in the power switch cover. To detach the cover, use a sharp-pointed object.

To use this cover, install it as shown in the illustration below.

⚠ ***WARNING:***
If an accident occurs with the power switch cover attached, unplug the power cord immediately. Continued use may cause fire or shock.

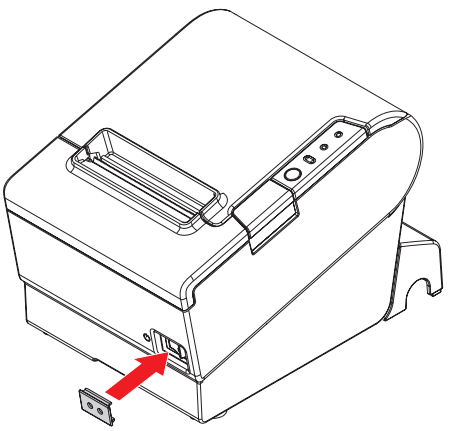

Changing the Paper Width

If a roll paper guide is included with your printer, you can change the paper width from 80 mm to 58 mm by installing the roll paper guide. Follow the steps below to change the paper width.

⚠ ***CAUTION:***

If you once change the paper width from 80 mm to 58 mm, you cannot change it back to 80 mm.

When changing the paper width, be sure to make the setting for the paper width with utility software for the TM-T88V.

1. Open the roll paper cover.
2. Install the roll paper guide so that the projection on its bottom is aligned with the hole at the right of the roll paper holder.

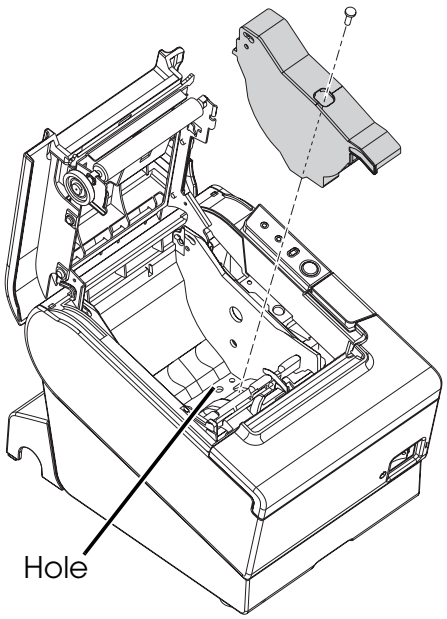

3. Tighten the enclosed screw to fix the roll paper guide.

4. Paste the enclosed 2 strips along the roll paper guide on the bottom of the roll paper holder. Make sure the space between the top edge of strip and the line of the groove in the roll paper guide (indicated as ***a*** in the illustration) is 0.5 mm or less.

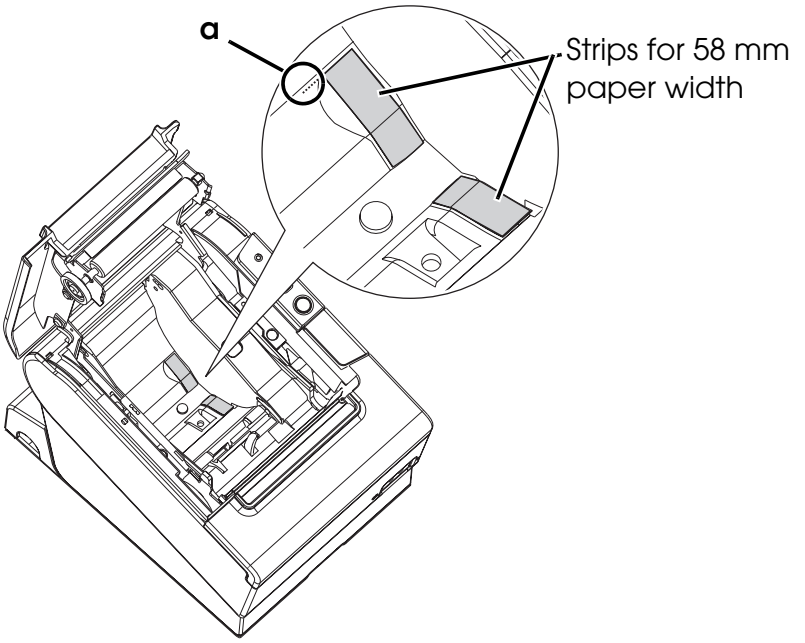

5. Install the roll paper correctly.
6. Close the roll paper cover.

Troubleshooting

No lights on the control panel

Check whether the power supply cable is correctly connected to the printer and the socket.

Error LED on with no printing

- ❏ Check whether the roll paper cover is closed. If it is open, close it.
- ❏ If the Paper LED is **on**, check whether the roll paper is correctly installed and any roll paper remains.

Error LED flashing with no printing

- ❏ Check whether a paper jam has occurred. If paper is jammed, remove the jammed paper referring to the description below and install the roll paper correctly.
- ❏ Printing stops if the head overheats and resumes automatically when it cools.
- ❏ For other cases, turn the printer off, and after 10 seconds, back on.

Removing Jammed Paper

When a paper jam occurs, never pull out the paper forcibly. Open the roll paper cover and remove the jammed paper.

⚠ ♨ ***CAUTION:***
Do not touch the thermal head and the frame on its side (indicated in the circle in the illustration below) because it can be very hot after printing.

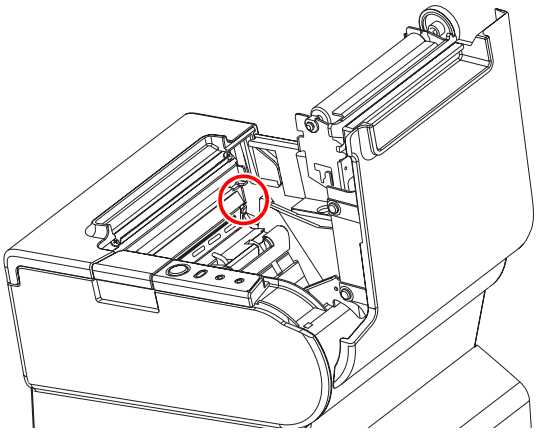

If the roll paper cover does not open, follow the steps below.

1. Turn off the printer.
2. Slide the cutter cover toward the front to open it.

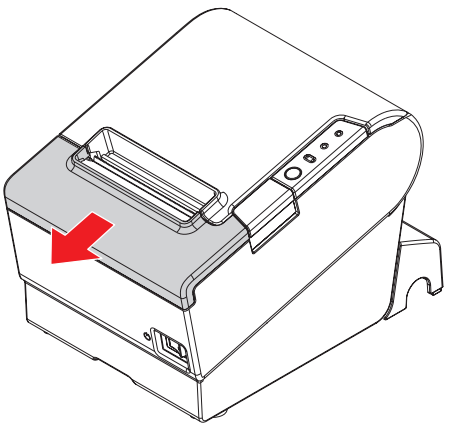

3. Turn the knob until you see a triangle in the opening. This returns the cutter blade to the normal position. There is a label near the cutter to assist you.

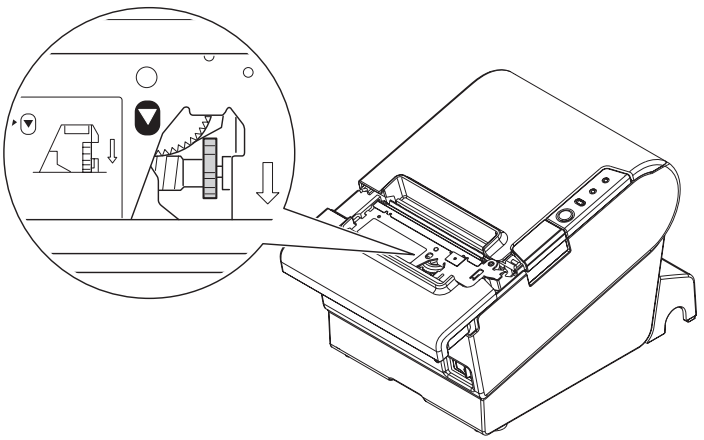

4. Close the cutter cover.
5. Open the roll paper cover and remove the jammed paper.

Cleaning

Cleaning the Printer Case

Be sure to turn off the printer, and wipe the dirt off the printer case with a dry cloth or a damp cloth.

⚠ ***CAUTION:***
Never clean the product with alcohol, benzine, thinner, or other such solvents. Doing so may damage or break the parts made of plastic and rubber.

Cleaning the Thermal Head

⚠ ♨ ***CAUTION:***
After printing, the thermal head and the frame on its side (indicated in the circle in illustration below) can be very hot. Be careful not to touch it and to let it cool before you clean it. Do not damage the thermal head by touching it with your fingers or any hard object.

Turn off the printer, open the roll paper cover, and clean the thermal elements of the thermal head with a cotton swab moistened with an alcohol solvent (ethanol or IPA).

Epson recommends cleaning the thermal head periodically (generally every 3 months) to maintain receipt print quality.

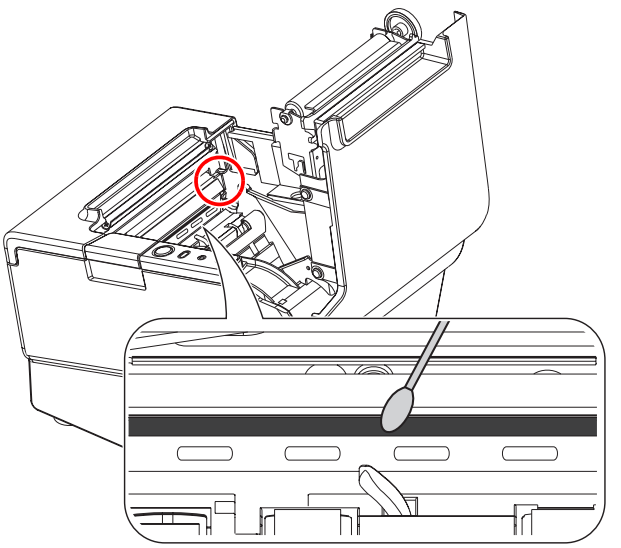

Setting the DIP Switches

⚠ ***CAUTION:***

Be sure to turn off the printer before removing the cover of the DIP switches. Removing it while the printer is turned on may cause problems such as an electric short, which leads to a malfunction of the printer.

1. Turn off the printer.
2. Turn over the printer.
3. Remove the DIP switch cover by removing the screw.
4. Set the DIP switches using a fine-tipped tool.
5. Replace the DIP switch cover, and fix it by installing the screw.

The new setting becomes effective after the printer is turned on.

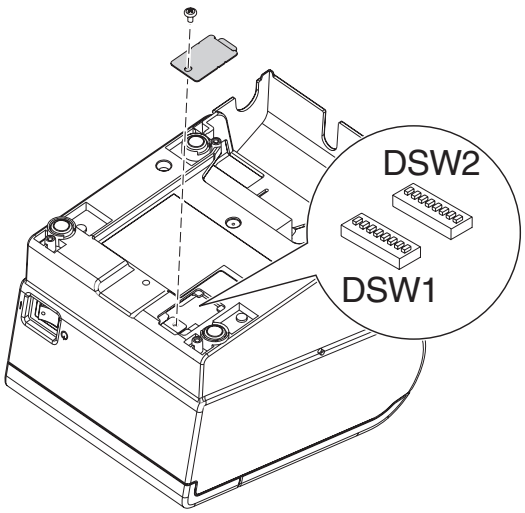

DIP Switch Tables

When using Serial Interface

DIP Switch Bank 1

SW	Function	ON	OFF
1-1	Data receive error	Ignored	Prints "?"
1-2	Receive buffer capacity	45 bytes	4KB
1-3	Handshaking	XON/XOFF	DTR/DSR
1-4	Data word length	7 bits	8 bits
1-5	Parity check	Enabled	Disabled
1-6	Parity selection	Even	Odd
1-7 1-8	Transmission speed (See table A.)		

DIP Switch Bank 2

SW	Function	ON	OFF
2-1	Handshaking (BUSY condition)	Receive buffer full	Offline or Receive buffer full
2-2	Do not change settings	Fixed to OFF	
2-3 2-4	Print density	See Table B	
2-5	Release condition of receive buffer BUSY (If receive buffer capacity set to 4KB.)	Releases BUSY when remaining receive buffer capacity reaches 138 bytes.	Releases BUSY when remaining receive buffer capacity reaches 256 bytes.
2-6	Do not change setting.	Fixed to OFF	
2-7	I/F pin 6 reset	Enabled	Disabled
2-8	I/F pin 25 reset	Enabled	Disabled

Table A

Transmission speed (bps) bits per second	SW1-7	SW1-8
38400*1	ON	ON
4800	OFF	ON
9600	ON	OFF
19200	OFF	OFF

*1: When DIP switches 1-7 and 1-8 are on, the transmission speed can be selected from one of seven speeds: 2400, 4800, 9600, 19200, 38400, 57600, and 115200 bps by control commands.

When using Parallel Interface

DIP Switch Bank 1

SW	Function	ON	OFF
1-1	Auto line feed	Always enabled	Always disabled
1-2	Receive buffer capacity	45 bytes	4KB
1-3	Select paper sensors to output paper-end signals (default value of a command) from parallel I/F.	Disabled	Roll paper end sensor enabled, Roll paper near-end sensor enabled
1-4	Error signal output from parallel I/F	Disabled	Enabled
1-5~ 1-8	Undefined		

DIP Switch Bank 2

SW	Function	ON	OFF
2-1	Handshaking (BUSY condition)	Receive buffer full	Offline or Receive buffer full
2-2	Do not change settings	Fixed to OFF	
2-3 2-4	Print density	See Table B	
2-5	Release condition of receive buffer BUSY (If receive buffer capacity set to 4KB.)	Releases BUSY when remaining receive buffer capacity reaches 138 bytes.	Releases BUSY when remaining receive buffer capacity reaches 256 bytes.
2-6 2-7	Do not change setting.	Fixed to OFF	
2-8	I/F pin 31 reset signal (Do not change setting)	Fixed to ON	

Table B

Print density/low power	SW2-3	SW2-4
Print density "Normal"	OFF	OFF
Print density "Medium"	ON	OFF
Print density "Dark"	OFF	ON
Do not set	ON	ON

When using USB/Ethernet/Wireless LAN Interface

DIP Switch Bank 1

SW	Function	ON	OFF
1-1	Auto line feed	Always enabled	Always disabled
1-2	Receive buffer capacity	45 bytes	4KB
1-3~ 1-8*1	Undefined		

*1: When using the USB interface on a model with a serial or parallel interface, the function of DIP switch 1-8 is as follows.

SW	Function	ON	OFF
1-8	Power saving function for USB	Disabled	Enabled

DIP Switch Bank 2

SW	Function	ON	OFF
2-1	Handshaking (BUSY condition)	Receive buffer full	Offline or Receive buffer full
2-2	Do not change settings	Fixed to OFF	
2-3 2-4	Print density	See Table B	
2-5	Release condition of receive buffer BUSY (If receive buffer capacity set to 4KB.)	Releases BUSY when remaining receive buffer capacity reaches 138 bytes.	Releases BUSY when remaining receive buffer capacity reaches 256 bytes.
2-6 2-7	Do not change setting.	Fixed to OFF	
2-8	Do not change setting.	*2	

*2: Whether DIP switch 2-8 is set to ON or OFF is dependent on the printer model.

Table B

Print density/low power	SW2-3	SW2-4
Print density "Normal"	OFF	OFF
Print density "Medium"	ON	OFF
Print density "Dark"	OFF	ON
Do not set	ON	ON

Specifications

	80 mm paper width	58 mm paper width*1
Printing method	Thermal line printing	
Dot density	180 dpi ×180 dpi (dots per 25.4 mm {1"})	
Printing direction	Unidirectional with friction feed	
Printing width	72 mm {2.83"}, 512 dot positions	50.8 mm {2.0"}, 360 dot positions
Characters per line (default)	Font A: 42; Font B: 56	Font A: 30; Font B: 40
Character spacing (default)	Font A: 0.28 mm {.01"} (2 dots), Font B: 0.28 mm {.01"} (2 dots)	
Character size	Standard/Double-height/Double-width/Double-width and Double-height Font A: 1.41 × 3.39/1.41 × 6.77/2.82 × 3.39/2.82 × 6.77 mm Font B: 0.99 × 2.40/0.99 × 4.80/1.98 × 2.40/1.98 × 4.80 mm	
Character structure	Font A (default): 12 × 24; Font B: 9 × 17 (including 2-dot horizontal spacing)	
Number of characters	Alphanumeric characters: 95; International character sets: 18 sets Extended graphics: 128 × 43 pages (including user-defined page)	
Printing speed	300 mm/s {11.8"/s} max.; 70.9 lps (4.23 mm {1/6"} feed) Ladder bar code and 2D code: 100 mm/s {2.4"/s}	
	The above speed values are approximate. The values are when the printer prints with density "Normal" at 24 V and 25°C {77°F} Speed is adjusted automatically depending on the voltage applied and head temperature.	

		80 mm paper width	58 mm paper width*1
Paper feed speed		Approx. 200 mm/s {approx. 7.9"/s} (continuous paper feed with the Feed button.)	
Line spacing (default)		4.23 mm {1/6"}	
Roll paper (single-ply)	**Width**	79.5 mm ± 0.5 mm {3.13" ± 0.02"}	57.5 mm ± 0.5 mm {2.26" ± 0.02"}
	Diameter	Maximum outside diameter: 83 mm {3.27"}	
	Spool	Spool diameter: Inside: 12 mm {0.47"}; Outside: 18 mm {0.71"}	
Thermal paper type		NTP080-80	NTP058-80
Interface (compatible)		Serial (RS-232)/Parallel (IEEE1284)/Ethernet (10BASE-T/100BASE-TX)/ Wireless LAN (IEEE802.11b)/USB (Compliance: USB 2.0, Communication speed: Full-speed (12 Mbps))/USB Plus Power (Communication speed: Full-speed (12 Mbps))	
Receive buffer		4KB/45 bytes	
Cash drawer function		2 drives	
Supply voltage*2		DC + 24 V ± 7%	
Current consumption		Mean: Approx. 1.8A	
Temperature		Operating: 5 to 45°C {41 to 113°F} Storage: –10 to 50°C {14 to 122°F}, except for paper	
Humidity		Operating: 10 to 90% RH Storage: 10 to 90% RH, except for paper	
Overall dimensions		148 × 145 × 195 mm {5.83 × 5.71 × 7.68"} (H × W × D)	
Weight (mass)		Approx. 1.6 kg {3.5 lb}	

lps: lines per second dpi: dots per 25.4 mm (dots per inch)

*1: The values are those when the paper width is changed to 58 mm by installing the roll paper guide and making the paper width setting with utility software for the TM-T88V. The roll paper guide may not be included depending on the printer model.

*2: Be sure to use a safety-standards-applied power source that meets the following specifications. Rated output: 24 V/2.0 A or more, Maximum output: 240 VA or less