IBM AnyPlace Kiosk 4838

Planning, Installation, and Service Guide for Models 5xx, 7xx, and 9xx

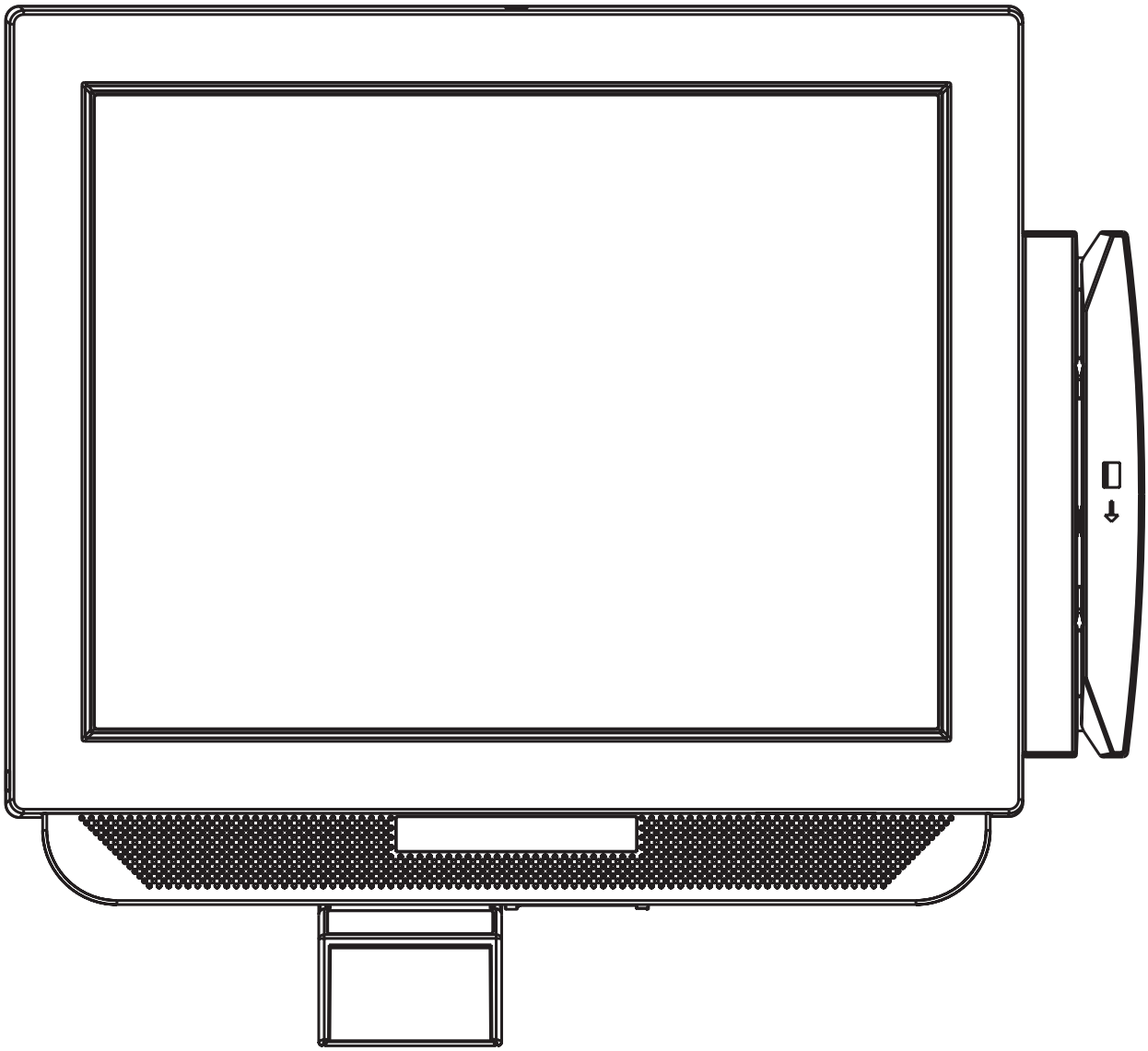

GA27-4369-01

IBM AnyPlace Kiosk 4838

Planning, Installation, and Service Guide for Models 5xx, 7xx, and 9xx

GA27-4369-01

Note

Before using this information and the product it supports, read the information in IBM Safety Information — Read This First, GA27-4004, and Appendix C, “Notices”.

November 2008

This edition applies to the IBM AnyPlace Kiosk 4838 and to all subsequent releases and modifications until otherwise indicated in new editions.

Retail Store Solutions documentation is available on the IBM Retail Store Solutions Web site at: http://www.ibm.com/solutions/retail/store/support/.

A form for reader's comments is also provided at the back of this publication. If the form has been removed, address your comments to:

IBM Corporation
Retail Store Solutions Information Development
Department ZBDA
PO Box 12195
Research Triangle Park, North Carolina 27709 USA

When you send information to IBM, you grant IBM a nonexclusive right to use or distribute whatever information you supply in any way it believes appropriate without incurring any obligation to you.

Contents

About this guide

This guide provides information on installing and servicing the IBM® Windows.

Note: Throughout this document, the term *IBM 4838* refers to the IBM AnyPlace Kiosk Models 5xx, 7xx, and 9xx.

How this guide is organized

This guide is organized as follows:

- Chapter 1, "Introducing the IBM AnyPlace Kiosk" describes the features and available options for the 4838.
- Chapter 2, "Installing the IBM AnyPlace Kiosk," on page 9 describes the installation instructions.
- Chapter 3, "Mounting the IBM AnyPlace Kiosk to the wall" describes the procedures for mounting the 4838 to the wall.
- Chapter 4, "Removing and replacing FRUs" provides the removal and replacement procedures for the field-replaceable parts.
- Chapter 5, "Diagnosing problems and troubleshooting" describes steps for diagnosing minor problems.
- Appendix A, "Field-replaceable units" describes the available FRU part numbers.
- Appendix B, "Product dimensions" provides precise product size information for all models and features.
- Appendix C, "Notices" provides legal, emission, and country-specific information.
- Appendix D, "Safety information" provides safety information for all common languages.

Who should read this guide

Personnel responsible for installing, maintaining, and using the IBM AnyPlace Kiosk should read this guide. Some chapters provide information that is intended for trained, technical personnel.

Related publications

The following IBM publications, drivers, and service diskette information are available from the IBM Retail Store Solutions Web site at: www.ibm.com/solutions/retail/store/support/.

- *IBM AnyPlace Kiosk Models 5xx, 7xx, and 9xx Operating System Installation Guide*, GA27-4371
- *IBM AnyPlace POS Hub Planning, Installation and Service Guide*, GA27-4370
- *IBM Safety Information – Read This First*, GA27-4004

Web sites

For the latest troubleshooting guidance and symptom-fix tip information, go to the IBM Knowledgebase support Web site at: www2.clearlake.ibm.com/store/support/html/knowledgebase.html.

This site contains additional information that is gathered from field experience, and not available when this document was developed.

Accessibility

Accessibility features help a user who has a physical disability, such as restricted mobility or limited vision, to use the IBM AnyPlace Kiosk successfully. Here is a high-level list of the accessibility features:

- All controls are located on the front of the system in easy reach.
- Industry-standard serial and USB ports allow alternative I/O devices.
- Manuals are available in PDF format and can be downloaded from the Web. See "Related publications" on page v for the Web address.
- Displays are driven at 60 Hz to eliminate problems caused by screen flicker.

Summary of changes

This edition of the IBM AnyPlace Kiosk 4838 Planning, Installation and Service Guide or Models 5xx, 7xx, and 9xx includes the following updates:.

September 2011

Updates to the USB hot plugging guidelines.

November 2008

Updates for this release include the following:

- Light-Path LEDs label
- xFlash version for the BIOS

March 2008

- Wireless notice updates
- Procedural changes for 19" monitor
- Part number updates
- Additional details and clarifications for access doors
- Touch screen cleaning procedures

December 2007

This version provides additional information about removing and programming the system board.

Chapter 1. Introducing the IBM AnyPlace Kiosk

The AnyPlace Kiosk is part of the IBM portfolio of self-service and POS solutions. Ultra-compact, the kiosk is an all-in-one integrated unit that delivers a dynamic interactive experience virtually anyplace with flexible point of sale capability.

The AnyPlace Kiosk comes with a choice of processors, a variety of screen sizes and a number of standard features and options that make it an ideal solution for kiosk and POS applications. The second generation of the AnyPlace Kiosk provides more expansion capability through the USB and serial ports, secondary VGA port, headphone and microphone jacks, and ExpressCard slot. Communications enhancements include Gigabit Ethernet and 802.11 a/g/b/n-draft wireless. This version of the AnyPlace Kiosk also includes several serviceability enhancements, including easy assembly and disassembly and built-in Light-Path LEDs for quick, accurate problem determination and resolution.

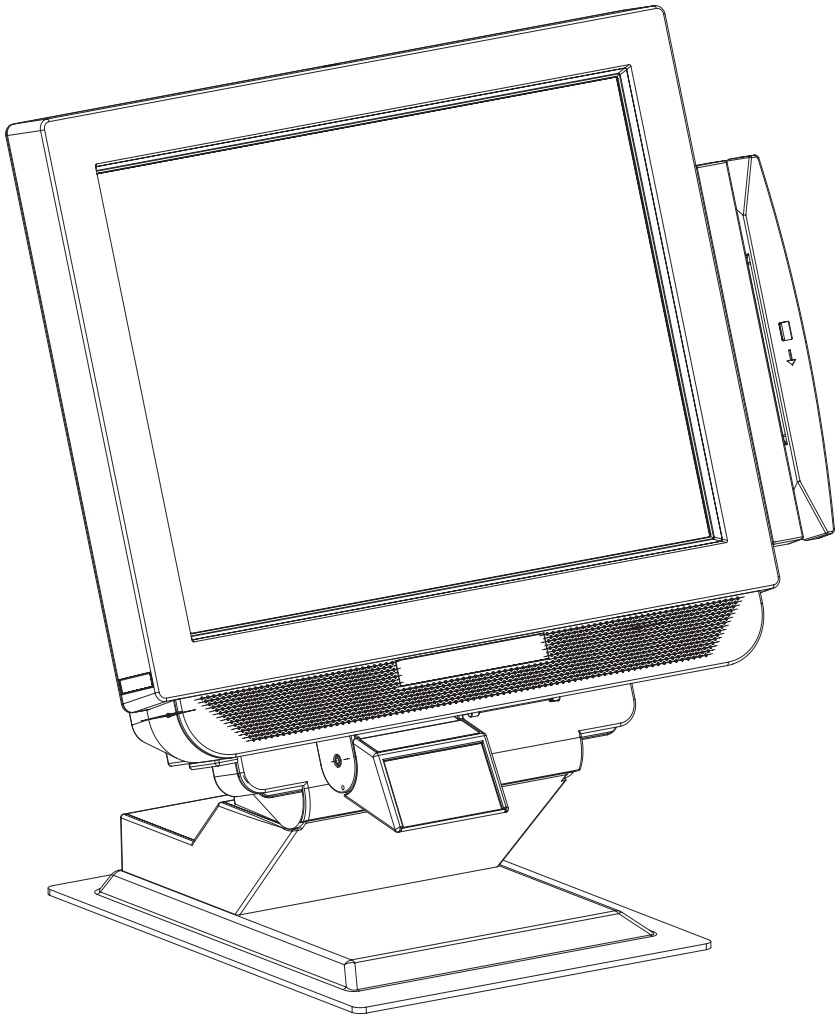

Figure 1. IBM AnyPlace Kiosk Model 5xx with a tabletop mount

To view the model dimensions, see Appendix B, “Product dimensions,” on page 81.

Models and features

This section describes the model numbering and optional features.

Administrative models and other models that represent different service repair options are not listed. See your IBM representative for a complete list.

The model scheme is as follows: 4838-XYZ.

X Indicates the screen size: 5 for 15 inch, 7 for 17 inch, and 9 for 19 inch

Y Processor type: either 1= AMD Sempron, and 2 = AMD Turion

Z Indicates the preinstalled software, if any:

- **0** None
- **E** Windows® Embedded for Point of Sale (WEPOS), Windows XP or Windows Vista

For example, a model 4838-720 would be a 17" screen size with Turion processor and no preload.

Table 1. Summary of characteristics and weight by model.

Characteristics	**Model 5xx**	**Model 7xx**	**Model 9xx**
Height	325.6 mm (12.82 in.)	367.5 mm (14.47 in.)	398.5 mm (15.69 in.)
Width	368.6 mm (14.51 in.)	402.0 mm (15.83 in.)	440.6 mm (17.35 in.)
Depth	72.8 mm (2.87 in.)	78.3 mm (3.08 in.)	82.8 mm (3.26 in.)
Weight	6.45 kg (14.2 lbs.)	8.27 kg (18.2 lbs.)	9.31 kg (20.5 lbs.)

Note: See Appendix B, “Product dimensions,” on page 81 for more detailed dimensions including the options.

Table 2. Feature descriptions

Features			
LCD	15" TFT 1024 x 768 2 bulb	17" TFT 1280 x 1024 4 bulb	19" TFT 1280 x 1024 4 bulb
CPU	AMD Mobile Sempron 3500+ 1.8 Ghz *or* AMD Mobile Turion 64 X2 TL-56 1.8 Ghz with 1 Ghz Front Side Bus (FSB)		
Memory	4 GB maximum system memory using 512 MB, 1 GB or 2 GB DDR2 667 (PC2-5300) SO-DIMMs in any combination		
Touch	Infrared with Unintentional Touch feature (RS 232 interface - COM5)		
Mass storage	80 GB 3.5" SATA II 7200 RPM 160 GB 3.5" SATA II 7200 RPM, 4 GB modular flash drive (optional)		
Video	• VIA integrated Chrome 9 graphics • External VGA (HD-15) output supporting dual independent video and mirrored video		
Video memory	• 256 MB max, shared dynamically from system memory		
Slots	1 ExpressCard (supports 34 mm or 54 mm)		

Table 2. Feature descriptions (continued)

Features	
PC I/O connectors	5 PC USB 2.0 2 RS-232 (9 pin) 1 Scanner (device specific RJ45) 1 MSR (device-specific RJ45) 1 Network (RJ45, Ethernet) 1 VGA (HD-15) 1 Microphone jack 1 PS/2 keyboard 2 Headphone jacks **Note:** PS/2 keyboard port for diagnostic purposes only, not externally accessible
Power system	• External 16 V DC 120 W AC adapter
Audio	• High-definition integrated audio • Integrated 2 watts-per-channel stereo speakers
Wired LAN	10/100/1000 Ethernet Wake on LAN enabled
Super I/O controller	UART (universal asynchronous receiver/transmitter) support with SMSC semiconductor solution
Presence sensor	Infrared presence detection
Security	• Trusted Platform Module v 1.2 • Power on password • Front USB port can be disabled in BIOS • Tabletop mount with a Kensington security slot (K-Slot) and mounting holes. See Figure 2 on page 5. • Capability for a customer supplied security screw to increase security of access doors
Modular servicing ease	Screwdriver access for the following: • ExpressCard • Hard disk drive • Memory DIMMs • Wireless card • Flash drive • Scanner • Servicing the system

Optional features

Table 3. IBM AnyPlace Kiosk hardware options

Option	Description
AnyPlace POS Hub	Enables connection of USB (5 V, 12 V and 24 V) peripherals and a cash drawer
Mass storage	3.5" Serial Advanced Technology Attachment (SATA) II, 80 GB standard / 160 GB optional
Memory	Two SO-DIMM (small outline dual in-line memory module), DDR2 (double data rate two synchronous dynamic random access) memory slots Base memory size is 512 MB
Modular flash drive (MFD)	4 GB
Magnetic stripe readers (MSRs)	ISO 3-track or JUCC
Bar code scanners	Non-laser-based line scanner Laser-based Omni scanner
Wireless LAN	802.11 a/b/g/ n-draft with integrated antennas **Note:** The wireless solution is certified for use only in certain countries. See Appendix C, “Notices,” on page 89.
Mounting options	Tabletop mount Wall mount
ExpressCard extended door	Provides a "bubble" to cover and protect extended-length ExpressCards **Attention:** Do not over tighten the plastic screws that are on the extended door cover. Plastic screws only require one tenth (1/10th or 10%) as much torque as normal metal screws. Use a screw torque of 0.5 kg-cm / 0.05 N-m / 0.4 in-Lb / 7 in-oz.
AC adaptor bracket	Powder-coated metal bracket that you can use to mount the AC adaptor under a cabinet or on a wall

Configurations

Your sales representative can provide the latest available configurations.

Mounting options

The mounting options for the IBM AnyPlace Kiosk are as follows:

VESA-standard mounting holes
The system has 100 mm VESA mounting points for use with standard, third party VESA mounting options.

Wall mount
This mount minimizes protrusion from the wall, but does not have any tilt or swivel capability.

Tabletop mount
This mount tilts the monitor forward and back and rests on a tabletop. For security, a Kensington security slot is provided (**A** in Figure 2). Also, a round 5.5 mm (0.217 in.) hole enables the mount to be secured (**B** in Figure 2) with an M5 or 10-24 pan head screw.

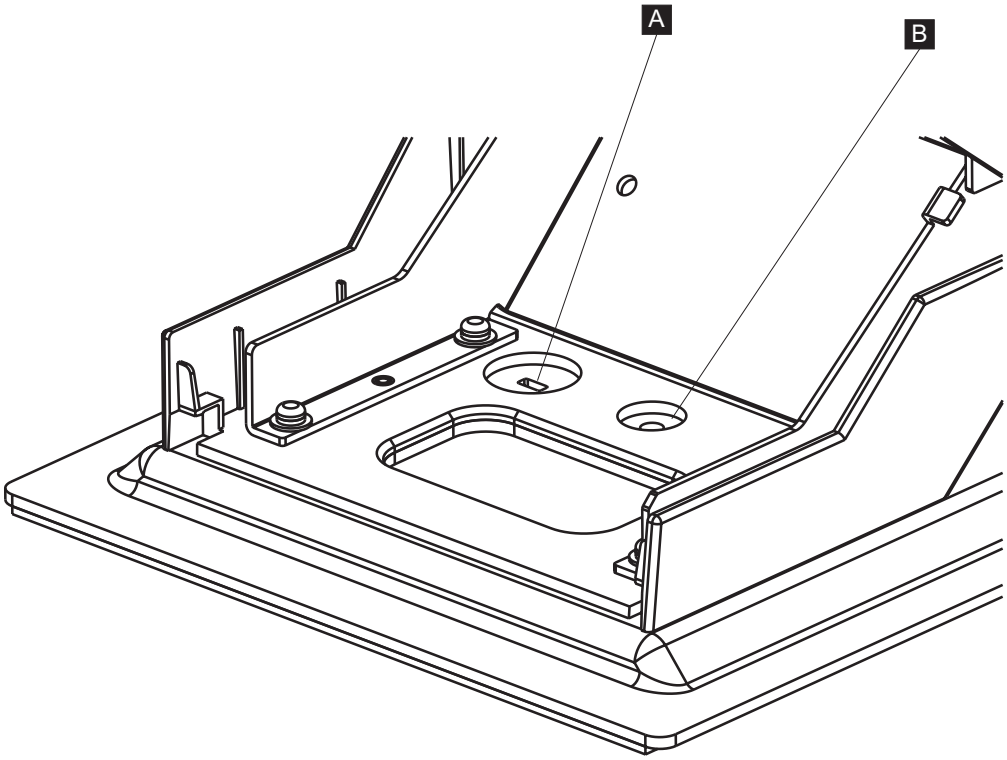

Figure 2. Security and mounting holes.

A Kensington security slot

B Round mounting hole

Diagnostics

The IBM AnyPlace Kiosk 4838 provides a diagnostic processor with Light-Path LEDS to easily help isolate a failing component or condition. An LED represents a specific action to correct the indicated problem. See “Using the diagnostic processor” on page 64.

You can obtain a USB memory key-based diagnostic package for your IBM AnyPlace Kiosk from the IBM Retail Store Solutions Web site: www.ibm.com/solutions/retail/store/support/.

Supported operating systems

The IBM AnyPlace Kiosk supports the following:

- Windows Embedded for Point of Sale (WEPOS)
- Windows XP Service Pack (SP) 2 or higher
- Windows Vista Business

For guidance on installing any of the previous operating systems, see the *IBM AnyPlace Kiosk Operating Systems Installation Guide,* GA27-4371.

Environmental requirements

Table 4 shows the humidity and temperature limits for the IBM AnyPlace Kiosk.

Table 4. Environmental requirements

	Temperature (dry bulb)	Maximum temperature (wet bulb)	Relative humidity
Operating	5 to 40°C (41° to 104° F)	27° C (81° F)	8 to 80%
Power disconnected	0 to 52°C (32° to 126° F)	27° C (81° F)	5 to 95%
Storage	0 to 60°C (-32° to 140° F)	29° C (84° F)	5 to 80%
Shipment	-40 to 60°C (-40° to 140° F)	29° C (84° F)	5 to 100%

This product relies on active, convective cooling, so place your unit such that the ambient air adjacent to the unit does not exceed supported maximums. Ensure that the cooling vents are not blocked by papers, signs, or other items.

Power usage

Table 5 shows the power consumption for the IBM AnyPlace Kiosk:

Table 5. Power usage

Description	Amounts
Power consumption	Off: 3.4 W (11.6 BTU/hr)
Heat dissipation:	Standby: 23.5 W (80.1 BTU/hr)
	On (idle/typical): 66 W (225.2 BTU/hr)
	On (maximum): 99 W (337.8 BTU/hr)
Input voltage and current	100–240 V, 50–60 Hz, 1.4 A max: Input to power supply

Calling for service

When you call IBM for warranty information or service, be sure to have the following information available:

- Machine type/model
- Serial number

You can locate this information on the left side of the front bezel, or the rear side of the unit.

Chapter 2. Installing the IBM AnyPlace Kiosk

This section describes procedures for setting up the IBM AnyPlace Kiosk product.

You should be familiar with the rear doors and connectors of the IBM 4838 before you begin the installation steps.

Rear view

Figure 3 shows the rear view of the AnyPlace Kiosk.

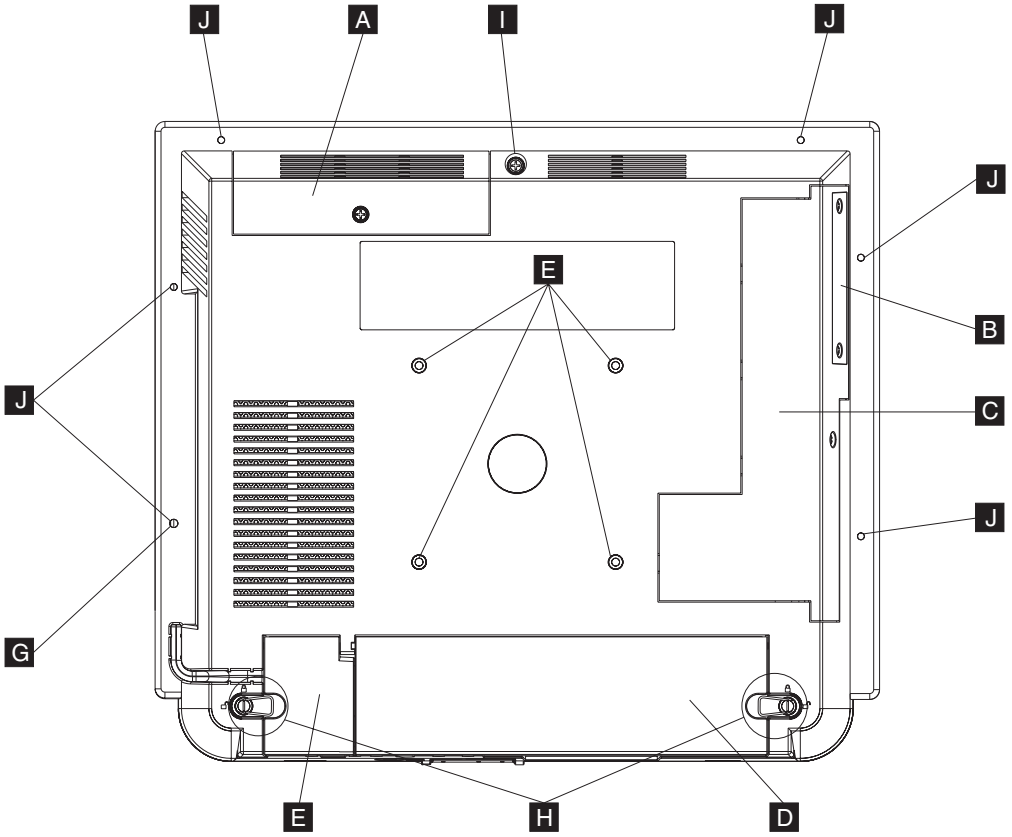

Figure 3. Rear view showing access doors, mounting holes, attachment holes

A Hard drive door with captured screw

B Side door allows access to memory slots, flash drive, Light-Path LEDs, wireless card, and CMOS jumper.

B ExpressCard slot cover

C Main cable cover

D MSR/USB cable cover

E Tapped holes that allow for the 100 mm x 100 mm (3.93 in. x 3.93 in.) mounting:

Note: These holes allow for the standard M4 X 10 mm screws specified by the VESA standard.

F MSR mounting hole that is shared with **I**.

G Quarter-turn latches

H Rear cover captured screw

I Tapped holes that allow the attachment and display of marques, announcements, sales promotions and other information.

Note: These tapped holes allow for M3 screws. The M3 mounting screw should extend into the unit a minimum of 8 mm, and a maximum of 11 mm.

Connectors

Figure 4 shows the AnyPlace Kiosk connectors.

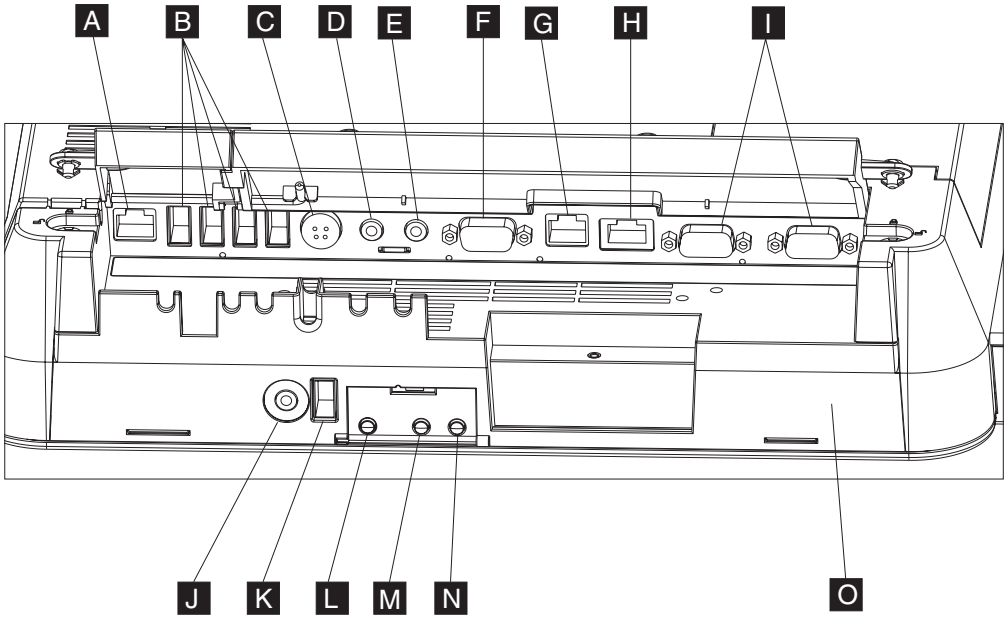

Figure 4. AnyPlace Kiosk connectors

Table 6. Connector location

A	MSR
B	USB ports (4X)
C	Power input connector (used by either the AC adapter or the AnyPlace POS Hub.)
D	Microphone
E	Headphone
F	VGA output
G	Scanner
H	Ethernet
I	RS 232 connectors (2X)
J	Headphone
K	USB port
L	Power button: Green indicates power and amber indicates a hardware fault.
M N	LCD brightness control buttons: minus - and plus +
O	Bottom cover

Installation steps

Follow these steps to install the IBM AnyPlace Kiosk:

1. Install your options. See “Installing the options” on page 14.
2. Route, connect, and retain the cables. See “Retaining the cables” on page 13.

   Note: Be sure to route the cables through the tabletop mount before connecting to the unit.
3. Install the IBM 4838 on your mounting option: tabletop (see “Tabletop mount” on page 21) or wall (see “Wall mount” on page 23) or the third-party VESA mount instructions.
4. Power On the IBM 4838. See “Powering on” on page 23.

Opening the cable covers

The cable covers provide security and protection to the IBM 4838 cable and connections.

Note: The MSR/USB cable cover can be opened independently of the main cover.

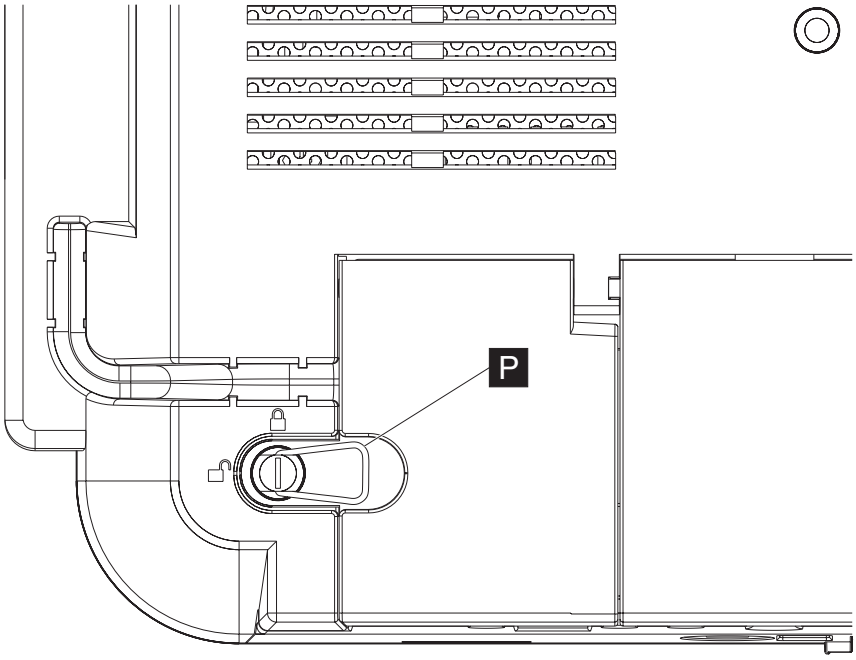

Figure 5. Close-up view of quarter-turn latch

Follow these steps to open the cable covers:

1. Flip up the metal handle (P).
2. Rotate the quarter-turn latches to the unlocked position.
3. Open the MSR/USB cable cover before opening the main cable cover.

Retaining the cables

The RS-232 cables and the VGA cable are retained to the system unit with screws. The MSR, scanner, and Ethernet cables are retained by a snap latch on the connector. The power input cable is retained by the system unit bottom cover.

You can retain the audio and USB cables by placing the cables into the U-slots that are part of the bottom cover. The slots in the cable covers retain the I/O cables by retaining the cable ties. Install the cable ties as follows:

1. Plug each cable into its respective connector.
2. Attach the cable ties to the I/O cables on the outside of the bottom cover. The cable tie width should be approximately 5 mm wide.

   Note: Ensure that the cable tie is large enough to keep the cable retained, and that it is installed extremely tight to the I/O cable. The head of the cable tie should be at the bottom of the bottom cover U-slot.
3. Adjust the cable so that the cable tie is on the I/O connector side of the bottom cover.

Installing the options

The design of the IBM 4838 allows you to install the options without removing the external cover. Table 7 describes the components and the respective access door.

Table 7. Components and doors

Door	Accessible component
Side	Wireless card, flash drive, memory modules, additional memory card, CMOS jumper
Inset side (small)	ExpressCard slot
Hard drive	Hard drive

Many upgrade features are factory-installed. See Figure 3 on page 10 to identify the access doors.

Installing the scanner

Follow these steps to install the scanner:

1. From the rear of the IBM AnyPlace Kiosk, open both cable covers using the quarter-turn latches.

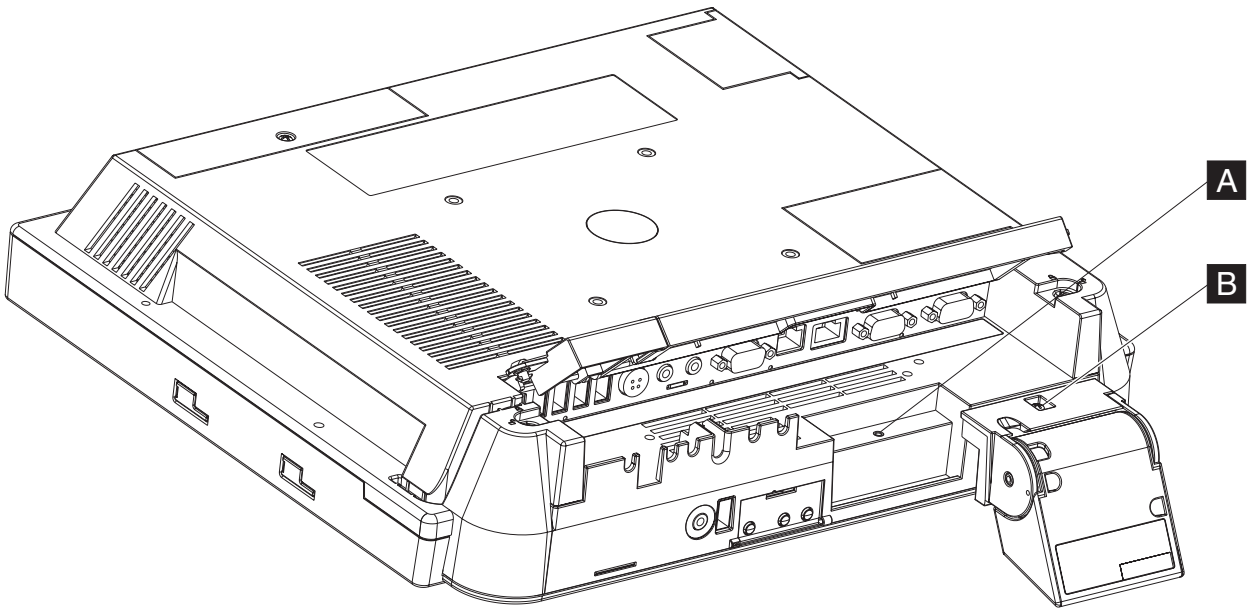

Figure 6. Installing the scanner

2. Align the scanner with the screw hole (A in Figure 6) and secure the captured screw (B).
3. Connect the scanner cable to its indicated connector.
4. Close and latch the cable covers.

Notes:

1. You can adjust the tilt angle of the scanner for optimum performance.
2. For best scanning results, hold the object to be scanned 50 to 100 mm (2 to 4 inches) away from the scanner.
3. Refer to the IBM Knowledge Base at the IBM Retail Store Solutions Web site (www.ibm.com/solutions/retail/store/support/) for details on configuring the scanner.

Installing the MSR

Follow these steps to install the MSR:

1. From the rear of the unit, open the MSR/USB cable cover using the quarter-turn latches.

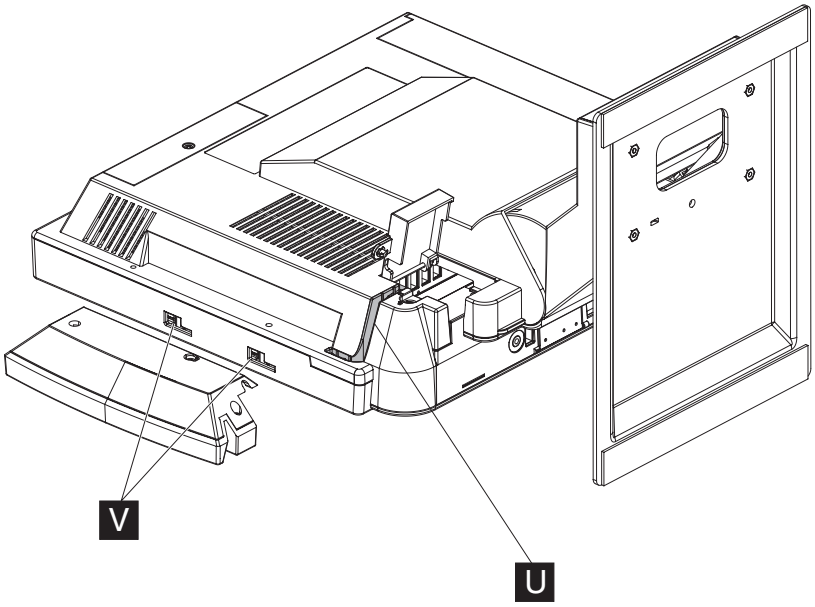

Figure 7. Installing the MSR

2. Use a small, flat-blade screw driver to pry and then lift out to remove the MSR plugs (V in Figure 7).
3. Locate the mounting slots for the MSR on the right side of the unit.
4. Align the MSR such that the MSR hooks are slightly above their matching slots on the 4838. Slide the MSR downward into position, being careful not to pinch the MSR cable.
5. Install the screw or thumbscrew to retain the MSR. Use the screw when the kiosk operates in a public environment so as to increase the security of the unit.
6. Plug the MSR cable to its indicated connector. See Figure 7.
7. Starting from the MSR, press the MSR cable into the U slot (U) in the rear cover. The excess MSR cable should be placed in the MSR/USB cable cover area.
8. Close and latch the MSR/USB cable cover.

Installing the flash drive

Follow these instructions to install the flash drive.

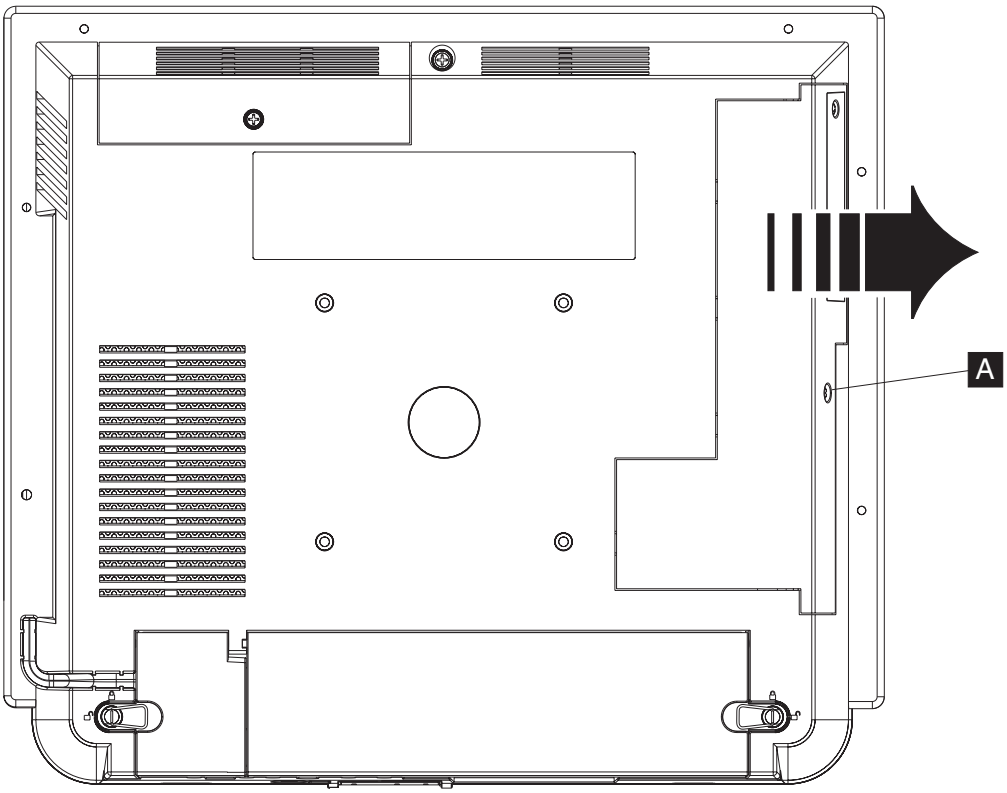

Figure 8. Removing the side access door

1. Loosen the captured screw on the side access door (**A** in Figure 8) and slide out in the direction shown to remove.

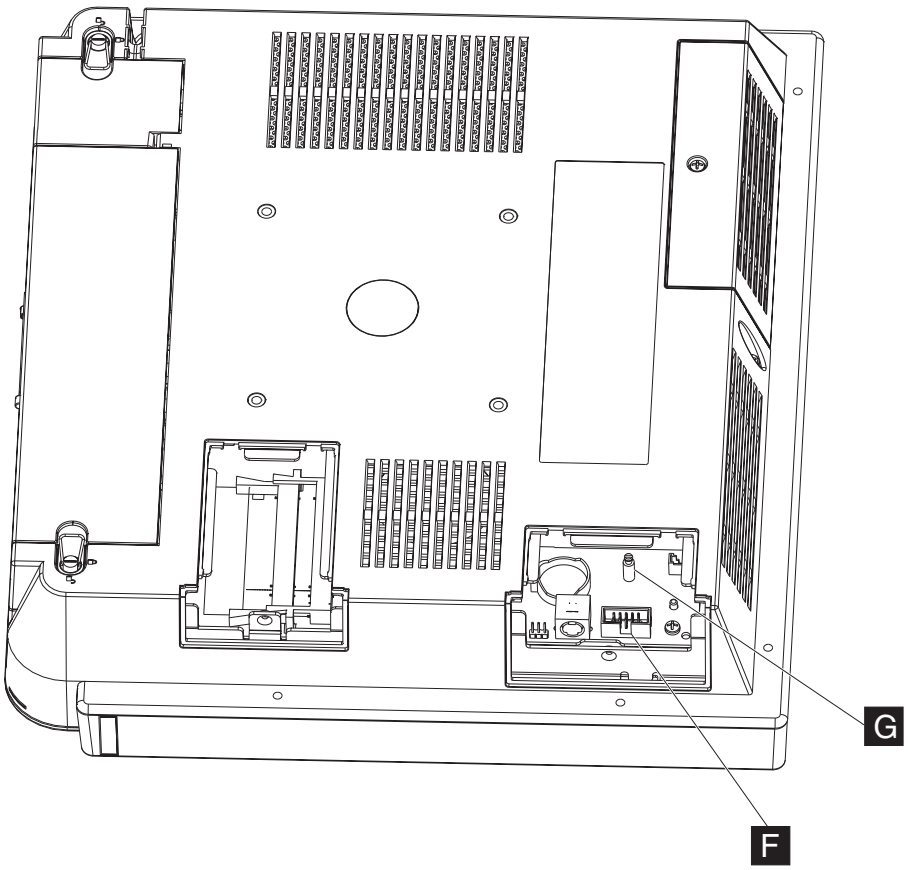

Figure 9. Location of the flash drive

2. Press the flash drive down onto the connector (**F** in Figure 9) and support post (**G**), and latch it into place.
3. Replace the side door by tightening the captured screw.

Note: Do not overtighten the screw.

Attaching the IBM AnyPlace POS Hub

The AnyPlace POS Hub is a high-speed USB 2.0 compatible hub that allows you to attach IBM point of sale input/output devices. These devices include printers, keyboards, displays, and cash drawers. The hub provides power for the I/O devices as well as the IBM AnyPlace Kiosk.

Note: Standard USB (5V) devices can be hot plugged into any USB port on an IBM system unit. If the hot plugged device does not function properly, try unplugging and reattaching the device to resolve the issue.

Important: Hot plugging a powered USB device (24V and 12V - red and green plugs respectively) can cause system errors and is not supported on any IBM system unit.

For more information, see the *IBM AnyPlace POS Hub Planning, Installation and Service Guide*, GA27-4370. Complete the following instructions to attach I/O devices to the AnyPlace POS Hub:

1. Locate or mount the AnyPlace POS Hub in a stationery location. Be sure that the air vents are not blocked.

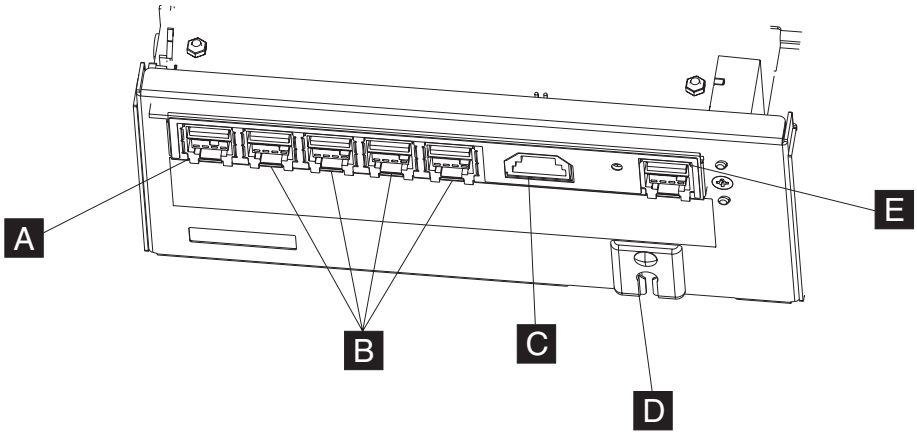

Figure 10. Power outputs

A 24V powered USB 2.0 port (POS printer)

B 4, 12V powered USB ports

C 24V cash drawer port (IBM cash drawers)

D Power connector (located on the bottom side of the hub enclosure)

E The AnyPlace POS cable connector, which connects the AnyPlace POS Hub to the AnyPlace Kiosk (or other host system unit) and has a positive retention (latching) connector. At the kiosk or host system unit end, the AnyPlace POS cable has two connectors as shown in Figure 11 on page 19:

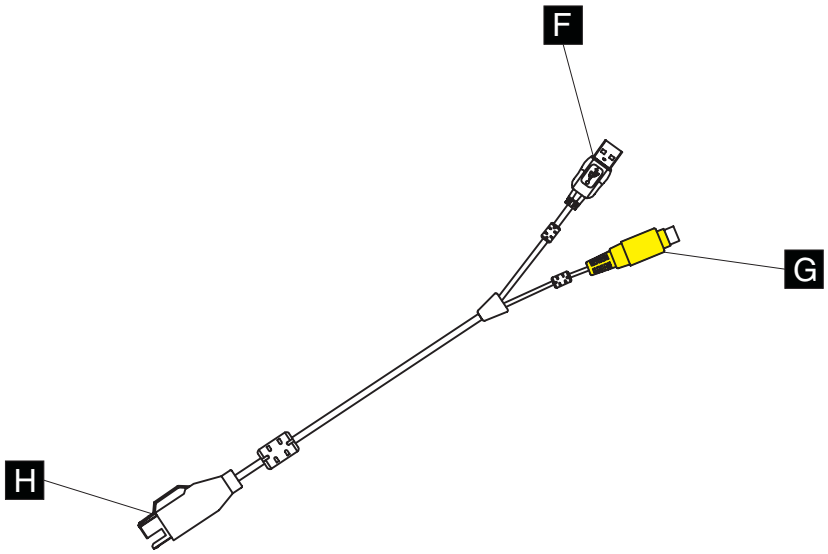

Figure 11. AnyPlace POS cable connectors

F Standard PC USB connector that attaches to one of the kiosk USB ports

G Power connector that attaches to the power input connector on the kiosk

H Connector that attaches to the AnyPlace POS Hub

2. Review Figure 10 on page 18 and connect your peripheral units to the hub. Connect the AnyPlace POS cable (**D** in Figure 10 on page 18) to the USB port directly adjacent to the power input port. and to the IBM AnyPlace Kiosk.
3. Connect the power cord of the AnyPlace POS Hub to an external power source.
4. Power on IBM AnyPlace Kiosk and the AnyPlace POS Hub is automatically powered on.

Note: Plugs **F** and **G** in Figure 11 must remain connected while the IBM AnyPlace Kiosk and hub are powered on. Removing the USB hub (**E**) will shut off the kiosk.

Installing the hard drive

Follow these steps to install a hard drive:

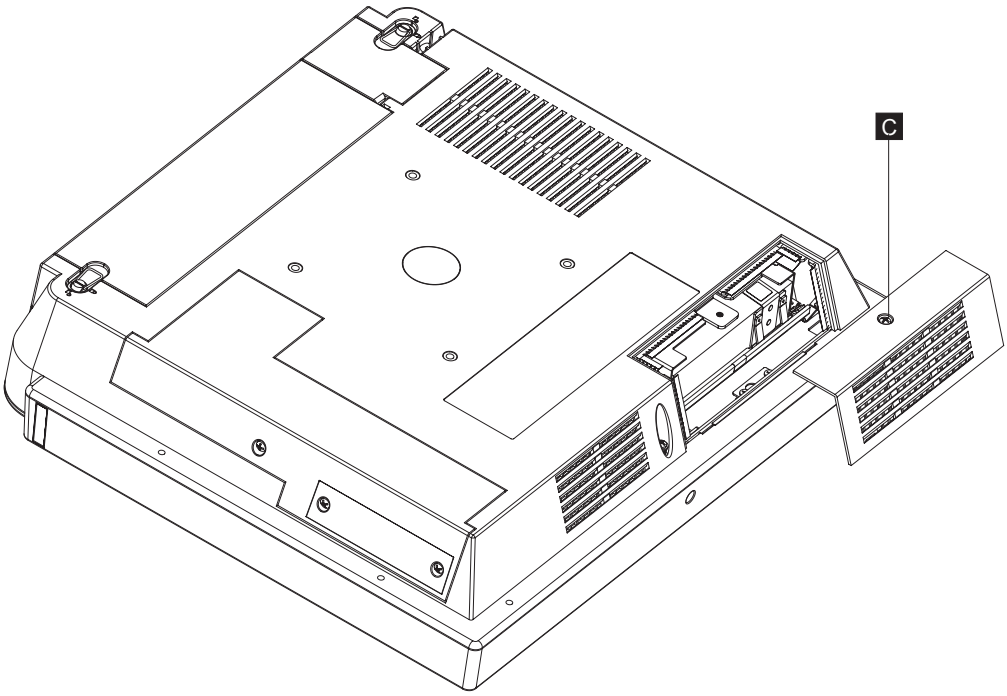

Figure 12. Opening the HDD door

1. Loosen the captured screw (C in Figure 12) to remove the HDD door.
2. Locate the slot and brackets and fully insert the hard drive until the hard drive is latched into place.
3. Close hard drive door and fasten the captured screw.

   Note: Do not over tighten the screw

Installing additional memory

Follow these instructions to install an additional memory card.

1. Place the 4838 face down on a sturdy surface.

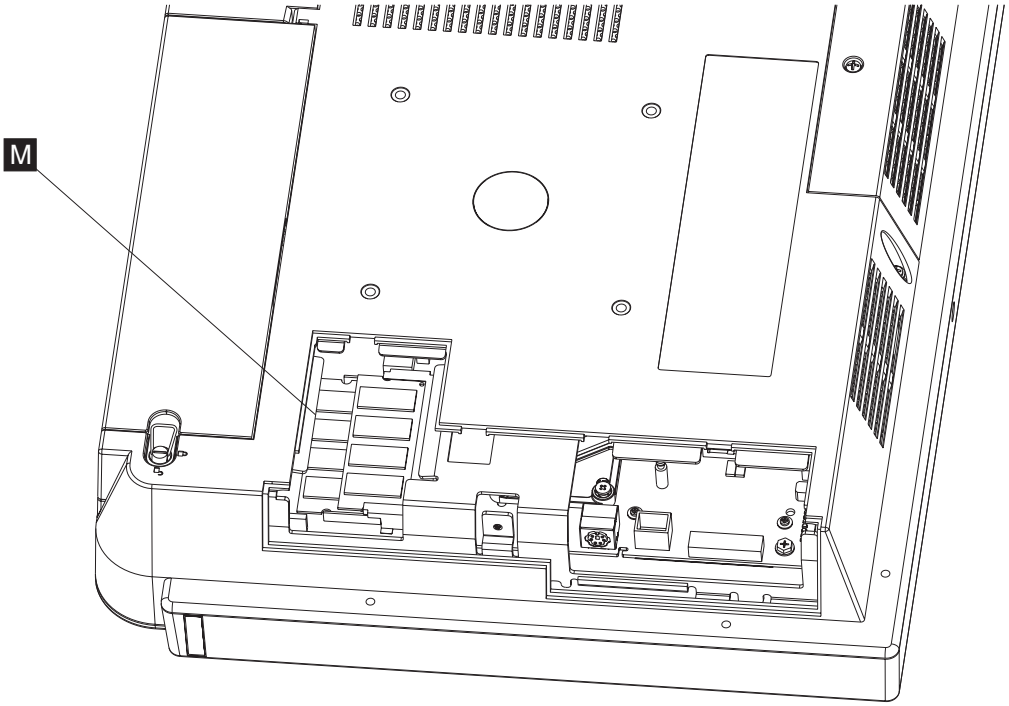

Figure 13. Installing additional memory

2. Loosen the captured screw holding the side access door (refer to Figure 8 on page 16).
3. Refer to the existing memory card position for reference (M in Figure 13). Insert the memory card into the memory connector.
4. Secure the memory card into the slot by rotating the memory down into position. The memory connector latches make a *click* sound, indicating that the memory card is retained. The memory should appear aligned relative to the connector (not angled, crooked or misaligned).
5. Install the side access door and fasten the captured screw.

   Note: Do not over tighten the screw

Mounting instructions

You can choose between a tabletop, wall mount, or a third party mount.

Tabletop mount

This section describes how to install the AnyPlace Kiosk on a tabletop mount.

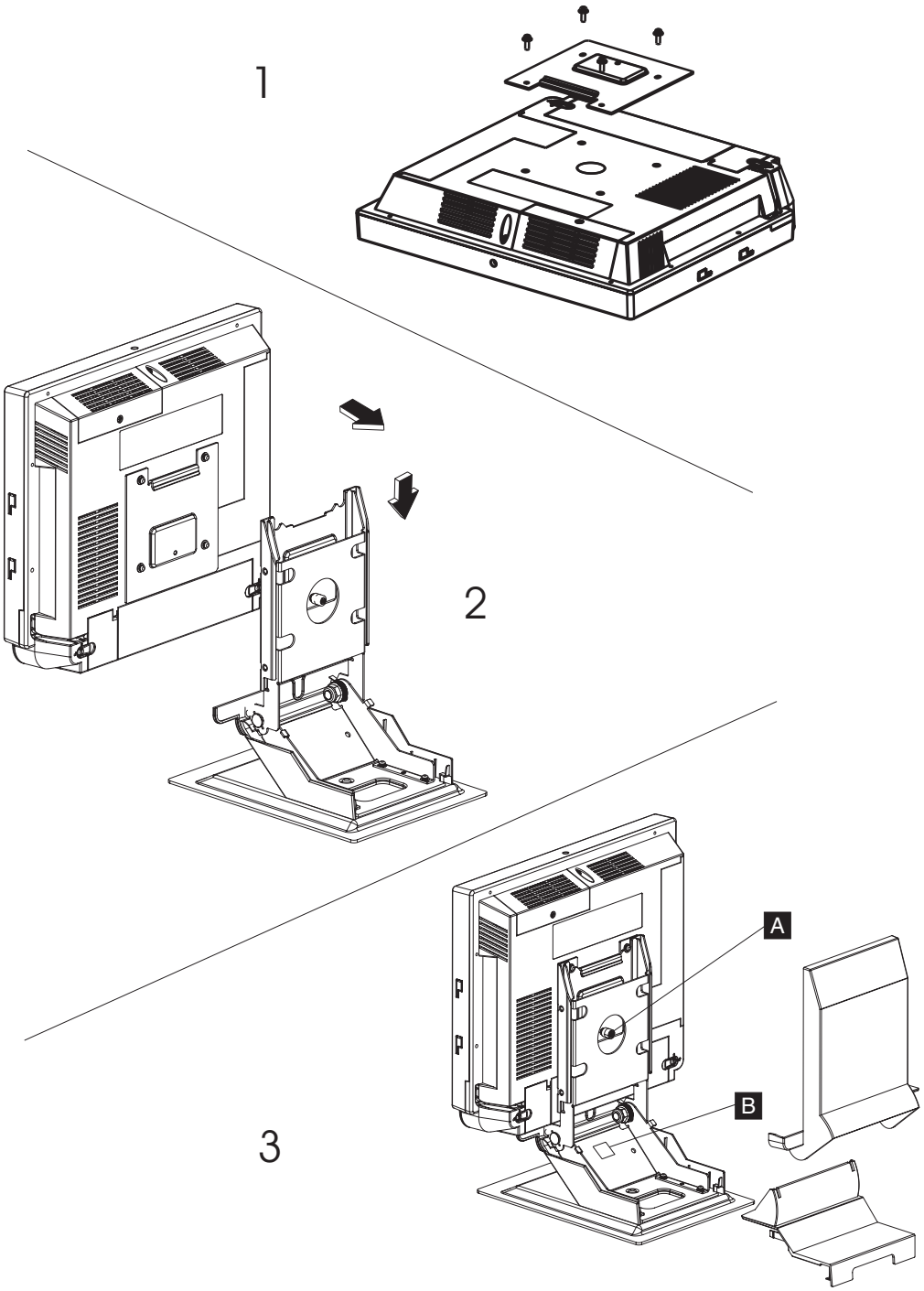

Figure 14. Installing tabletop mount

1. Attach the VESA adapter plate to the unit with the four screws that are provided. See picture **1** in Figure 14.
2. Tilt the upper potion of the mount so that it is 90 degrees (perpendicular) to the base of the mount. See picture **2** in Figure 14
3. Remove the base cover and upper cover.
4. Route and connect the cables to the IBM 4838.
5. Retain the cables (see “Retaining the cables” on page 13).
6. Close cable cover and latch the quarter-turn latches on the cable covers.

7. Is a scanner installed?

   Yes Remove the scanner wire slot cover.

   No Check that the scanner wire slot cover is installed.
8. Hook the unit onto the tabletop mount and tighten the mount thumb screw (**A** in picture **3** in Figure 14 on page 22) to secure the unit to the mount.
9. Install the base cover, then the upper cover.
10. Retain the AC adapter cable with the cable harness located on the tabletop mount (**B** in Figure 14 on page 22).
11. Place the IBM 4838 unit in the desired location.

Notes:

1. You can adjust the tilt angle of the unit for optimum performance.
2. The mount can be bolted to the counter top, using the hole provided. The bolt hole will allow you to use up to a #10 or M5 bolt.
3. A notebook computer type lock, which is compatible with the Kensington Lock slot, can also be used to secure the mount. The lock slot is located under the base cover.

Wall mount

Follow the procedures described in Chapter 3, “Mounting the IBM AnyPlace Kiosk to the wall,” on page 27.

Powering on

The following notes will assist you during powering on:

Notes:

1. Your new IBM AnyPlace Kiosk ships with a control button cover. The purpose of the control button cover is to limit access to the control buttons. This feature is especially desirable if the system is located in a public environment. Install this part after you power on and adjust the image.
2. Three small holes (see **L**, **M**, and **N** in Figure 15 on page 24 for the approximate location) in the control button cover allow you to actuate the control buttons. Use a paper clip or other small tool to actuate the button.
3. A paper clip is required to open or remove the cover. See “Installing the control button cover” on page 24 for additional information.

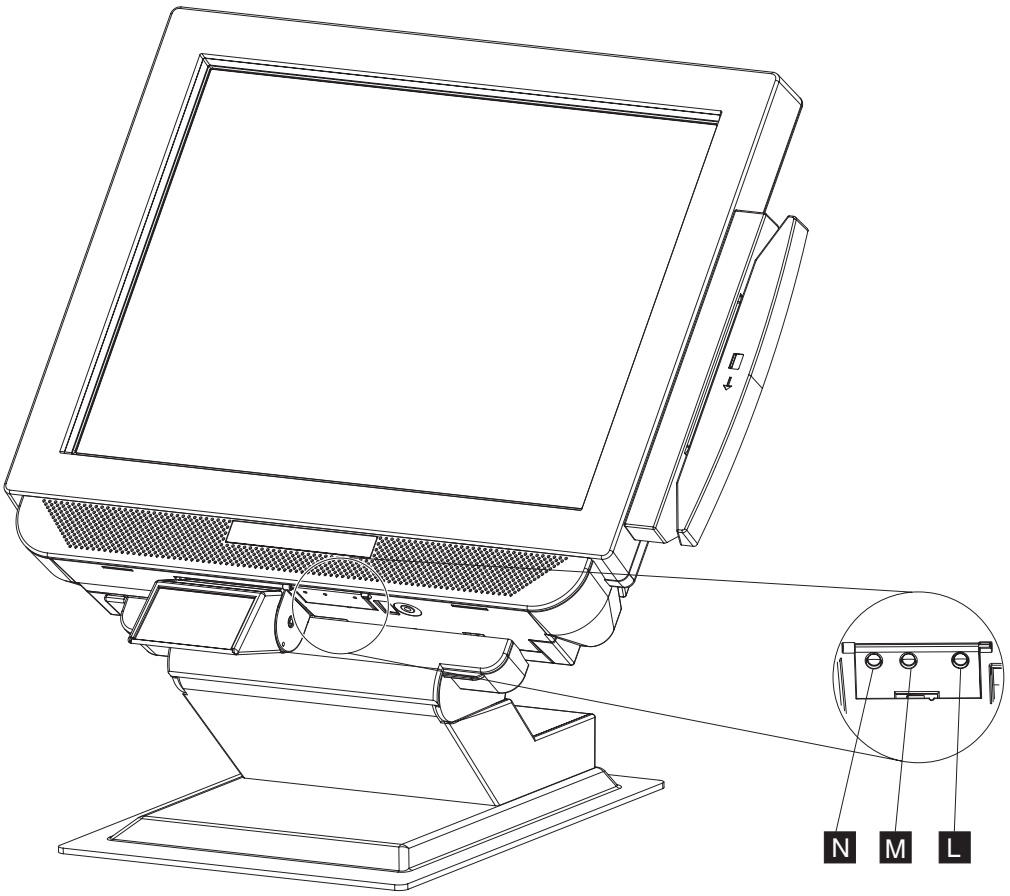

Figure 15. IBM 4838 controls

1. Plug the power adapter to the unit. If connecting to the 4838 to the AnyPlace POS Hub, go to "Attaching the IBM AnyPlace POS Hub" on page 18.
2. Plug the appropriate power cord into the AC power adapter (see "Power cords" on page 79) and then into an electrical outlet.
3. Power on the IBM 4838 using the power button (**L** in Figure 15). The 4838 power indicator light will initially appear green.
4. To adjust the LCD brightness, select the plus + or minus - keys (see **M** and **N** in Figure 15).

Installing the control button cover

To install the control button cover, follow these steps:

1. While facing the LCD, insert the hinge pin on the left side first, then insert the hinge pin in the right side.
2. Rotate the cover to swing and snap it into place.

To remove the cover:

1. Insert a heavy-duty metal paper clip in the slot on the bottom of the unit, approximately 9 to 12 mm (3/8 to 1/2 inch).
2. Push the paper clip to the rear of the unit, then pull down on the paper clip and pry the cover open.

Additional security (access door screws)

For additional security, a customer can supply and replace the access door screws with a "security screw" that requires a less common type of driver to remove (e.g. torx, security torx, spline, hex, square, etc). When a customer chooses to replace the screw, the customer will need to make arrangements to unfasten the screw when the unit needs to be serviced. The existing plastic screw retainer that is attached to the access door screw can be used with the security screw to keep the security screw retained to the access door.

Hard drive door screw specification:

Screw thread: Metric - M3x0.5
Screw length: 5.5 to 7 mm extension into the unit
Screw head type: Pan head, button head, cheese head, or similar
Screw head/washer outside diameter: 6 mm max
Screw head/washer total height: 3 mm max
Washer type: Flat washer or none at all
Screw material: Steel with an electrically conductive plating

Side door screw specification:

Screw thread: Metric - M3x0.5
Screw length: 7.5 to 9 mm extension into the unit
Screw head type: Pan head, button head, cheese head, or similar
Screw head/washer outside diameter: 6 mm max
Screw head/washer total height: 3 mm max
Washer type: Flat washer or none at all
Screw material: Steel with an electrically conductive plating

Chapter 3. Mounting the IBM AnyPlace Kiosk to the wall

Follow these procedures to mount the IBM 4838 to the wall.

Mounting the wall mount plate

The mounting adapter (A in Figure 16) is secured to a metal wall-mount plate (B), which can be installed on wood, drywall surface over studs, or a solid concrete or brick wall.

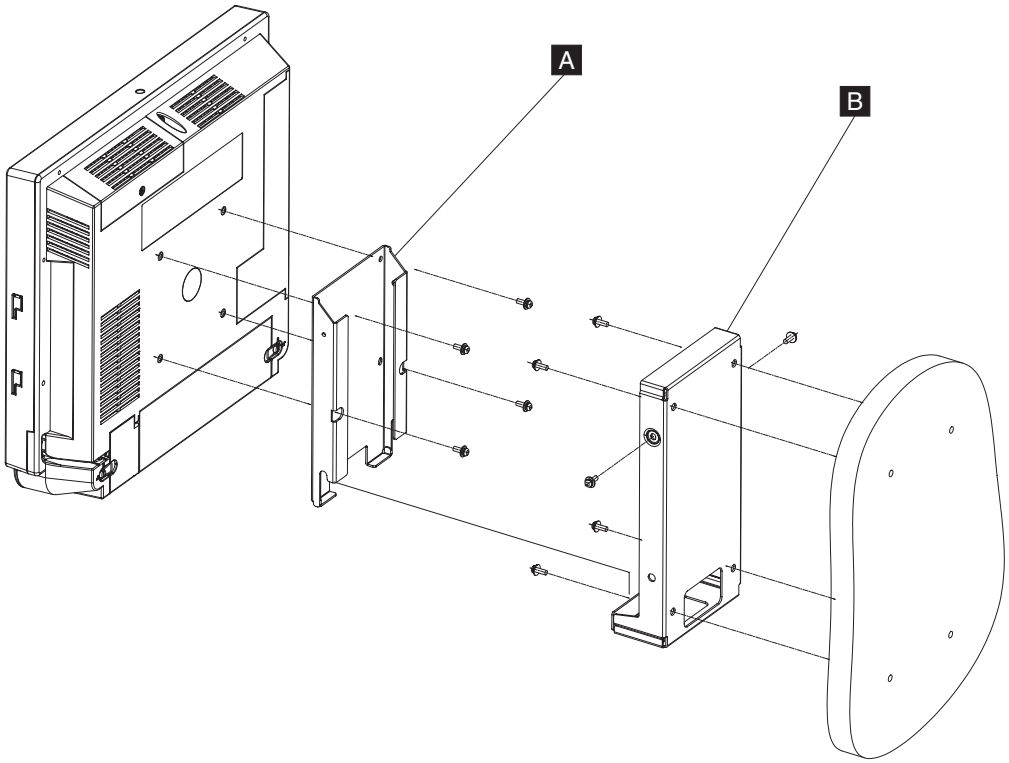

Figure 16. System and wall mount plate

Wall mounting requirements

Note: Before mounting the wall mount plate, ensure that you are following all applicable building and electric codes and accessibility requirements and guidelines.

When mounting, ensure that you have enough room for adequate viewing, ventilation, and access to an AC power outlet. The method of mounting must be able to support the combined weight of the IBM 4838 plus the suspended weight of all the cables to be attached to the system. Use the following methods for mounting your system:

Mounting to hollow walls

- **Method 1: Wood surface** – A minimum wood thickness—38 mm (1.5 in.) by 28 cm (11 in.)—of high, construction-grade wood is recommended.

  Note: This method provides the most reliable attachment of the unit with little risk that the unit will come loose or require ongoing maintenance.
- **Method 2: Drywall walls** – Drywall over wood studs is acceptable.

Mounting to a solid concrete or brick wall – Mounts on a flat smooth surface.

Selecting the location

Plan the mounting location thoroughly. Locations such as walkway areas, hallways, and crowded areas are ***not*** recommended. Mount the unit to a flat, sturdy, structurally sound column or wall surface.

The best mounting surface is a standard countertop, cabinet, table, or other structure that is, minimally, the width and length of the unit. This recommendation reduces the risk that someone can accidentally walk into and damage the device. Local laws governing the safety of individuals might require this type of consideration.

Determining the mounting height of wall mount plate

For users in a standing position, the typical height is approximately **122 cm (48 in.)** from the floor to the center of the touch display. The height used should be appropriate and comfortable for a majority of the users. Local laws might also govern the accessibility of the unit. In the United States, the Americans with Disabilities Act (ADA) limits the height of the top of the LCD image to a height of 137.2 cm (54 inches) above the floor, and this height might need to be lower depending on the size of obstructions that limit the depth of reach.

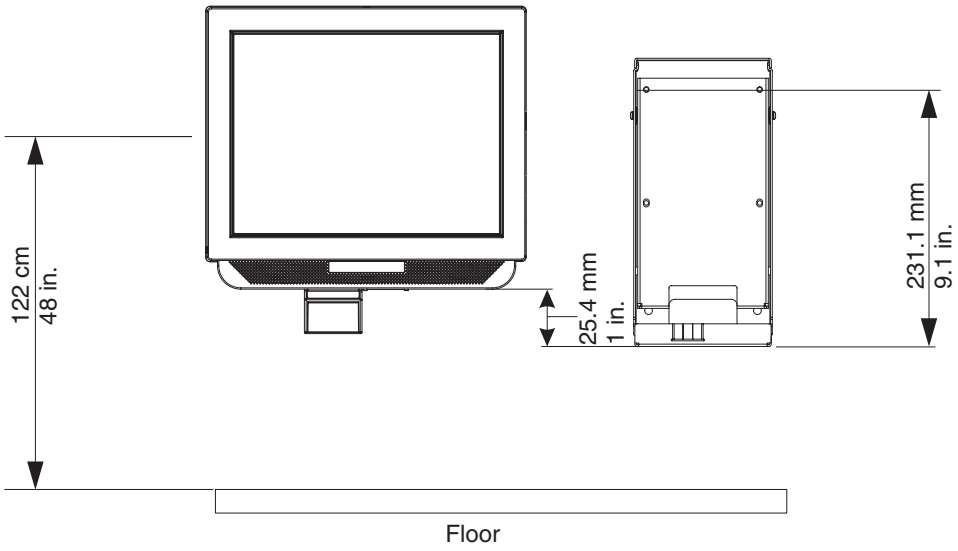

Figure 17. IBM 4838 mounting height

Wall mount plate mounting options

The wall mount plate and wall cutout dimensions are shown in Figure 18. The I/O and power cables for the unit can be routed either through the wall behind the unit, or out the bottom of the rear cover.

Note: Wall mount plate is not drawn to scale.

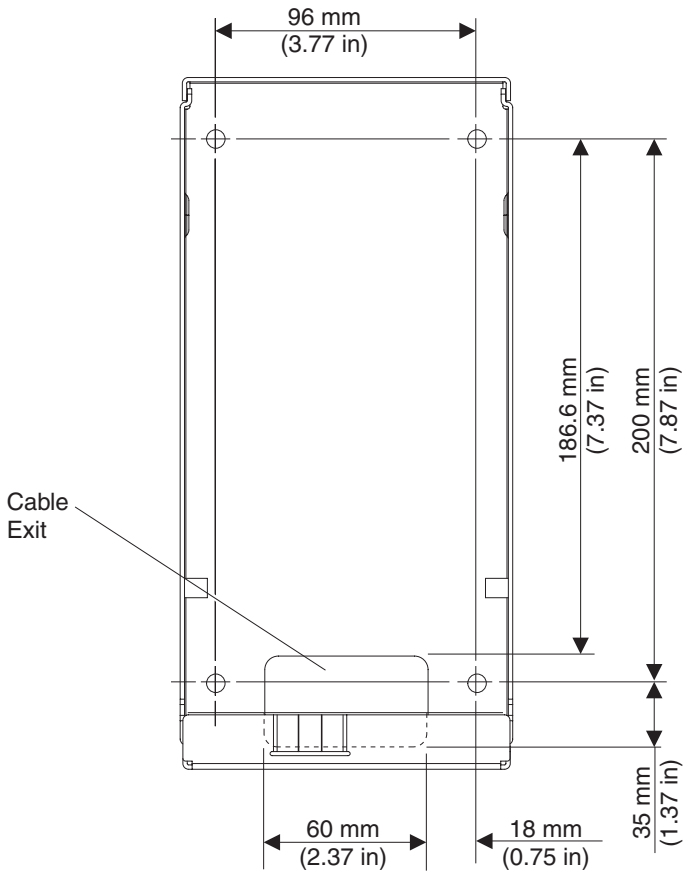

Figure 18. Wall mount plate and wall cutout dimensions

Attaching the wall mount plate

CAUTION:
The wall mount plate must be installed by an insured, qualified, professional installer who is familiar with building construction methods, building materials, building codes, electrical codes, fire codes, and local laws governing public access areas.

It is imperative that you attach the wall mount plate securely and permanently to the wall. The 4838 weighs up to 9.5 kg (21 lb.), and its weight is centered approximately 75 mm (3 in.) away from the wall mount plate mounting surface. In addition to this weight, the wall mount plate must maintain its security and attachment in the event the unit is knocked, bumped, or otherwise abused. If the wall mount plate is not securely attached to the wall, the unit might fall and be damaged, and can cause injury to others.

There is a wide variation of types of wall construction, age and condition. After reviewing the conditions on site, the installer must make the final judgment as to the suitability of the existing wall material to determine if additional bracing or supports are required.

Attaching the wall mount plate involves making minor modifications to the building construction. Be sure to observe proper safety precautions to prevent injury. Unforeseen hazards, for example, natural gas and power lines, can exist when drilling and cutting into walls.

Note: Compliance with local building codes, electrical codes and the governing laws should take precedence over this set of instructions.

Fasteners are not included with the unit, and must be supplied by the installer. The types of fasteners required are dependent on the type of wall construction. See “Fastener types” on page 33 for detailed descriptions and pictures of the fasteners. If the recommended size is not available, choose the next longer or larger size. Choose fasteners that are rated either ”Medium Duty“ or ”Heavy Duty.“ To assure proper fastener selection and installation, follow the fastener manufacturer's recommendations.

Mounting to hollow walls

Hollow walls include walls that are constructed of drywall board that is securely fastened to wood studs. The studs must make up the main structure and strength of the wall.

Method 1: Wood surface

Use this method if construction changes to the wall are permitted. This method will provide the most reliable attachment of the unit to the wall with little risk that the unit will ever come loose or require ongoing maintenance.

The drywall board is removed in an area approximately 30 cm (12 in.) high that spans the space between two studs. The two wood studs can be cut back approximately 38 mm (1.5 in.) by 28 cm (11 in.) high. A 38 mm (1.5 in.) thick by 28 cm (11 in.) high construction grade wood support is attached to the two wall studs with six lag screws as shown in Table 8 on page 31. Install the Lag Screws directly into the center of the studs without pre-drilling a hole. Do not use soap or other lubricant on the screws during installation. The wood support material should be either solid wood or plywood. After installation of the support, you can replace and prepare the drywall board for final finishing.

Table 8. Securing the wood support to the wood studs using lag screws

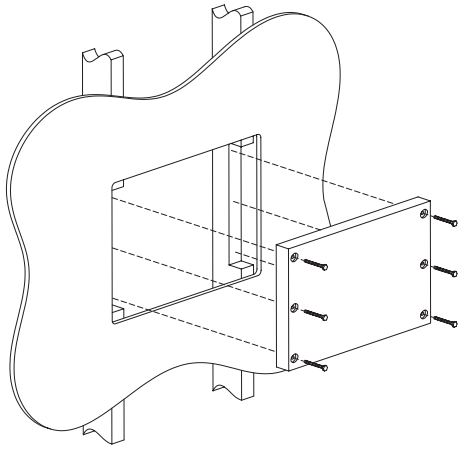	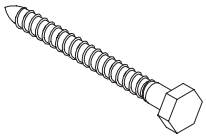 **Lag screw** Screw size: 6.3 mm (0.25 in.) or nominal thread diameter Length: 60 mm (2.5 in.) minimum

Use a bubble level to assure that the wall mount plate is mounted squarely. Use six wood screws to attach the wall mount plate to the wall. Center the wall mount plate vertically on the wood support. Install the wood screws directly into the wood support without pre-drilling a hole. Do not use soap or other lubricant on the screws during installation. See “Fastener types” on page 33 for more information.

After installation, make sure that the screw heads are flush or below the outer surface of the wall mount plate. Check to make sure that you firmly and securely attach the wall mount plate to the wall.

Method 2: Drywall surface

Use this method if you cannot make construction changes to the wall. This method provides a safe attachment of the unit to the wall. However, there is risk that the wall mount plate and unit might become loose if it is struck with a high force. The drywall must be at least 12.7 mm (0.5 in.) thick to use this method. Use a bubble level to assure that you mount the wall mount plate squarely.

Install two "Medium Duty" or "Heavy Duty" fasteners. Use fasteners, which are designed for drywall, in one side of the wall mounting plate **B**, as shown in Table 9 on page 32. Depending on the type of fastener, portions of the fastener can be installed into the wall first. You can possibly thread them through the screw holes in the wall mount plate. The recommended types of drywall fasteners are: self-drilling drywall anchor, hollow wall anchor, toggle bolt, self-drilling drywall toggle bolt, and plastic toggle bolt. Use two wood screws **A**, as shown in Table 9 on page 32, to attach the wall mount plate to the stud. Install the Wood Screws directly into the center of the stud without pre-drilling a hole. Do not use soap or other lubricant on the screws during installation. See “Fastener types” on page 33 fastener descriptions and pictures at the end of this section for more information.

Table 9. Securing the wall mounting plate to a drywall surface. This figure shows wood screws (**A**); however, other types of screws (**B**) can be used.

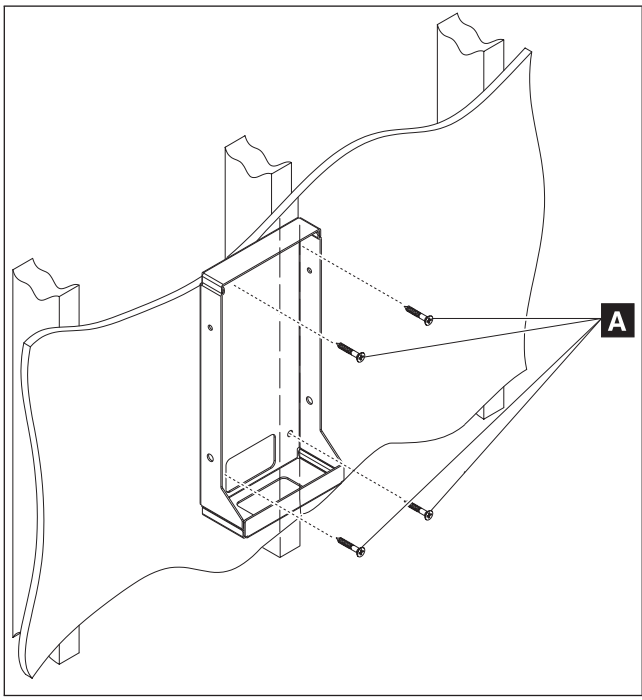	**A** 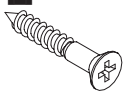 **Wood screw** Size: #12 or 5.5 mm nominal thread diameter Length: 38 mm (1.5 in.) minimum **Note:** can be installed on either the right or left side. **B** • Self-drilling drywall anchor • Hollow wall anchor • Toggle bolt • Plastic toggle bolt • Self-drilling drywall toggle bolt See Table 10 on page 33 for additional descriptions.

After installation, make sure the screw heads are flush or below the outer surface of the wall mount plate. Check to make sure you firmly and securely attach the wall mount plate to the wall.

Mounting to a concrete or brick wall

This mounting surface includes walls that are constructed of either brick wall and mortar or solid concrete.

Due to the variable nature of laying bricks, and the variation in types of mortar joints, most brick walls have an uneven surface. If possible, select a location on the wall that allows all four corner screw holes to remain flat without warping the wall mount plate. If this location is not possible, add a metal washer or other type of shim under one or more screw holes. This addition allows the wall mount plate to be mounted without warping it.

Use a bubble level to assure that you mount the wall mount plate squarely. Use four concrete anchors to attach the wall mount plate to the wall. Use one concrete anchor in each corner of the wall mount plate. See “Fastener types” on page 33 for detailed fastener information to determine the types of fasteners that are suggested.

After installation, make sure that the screw heads are flush or below the outer surface of the wall mount plate. Check to make sure that you attached the wall mount plate firmly and securely to the wall.

Fastener types

Table 10 lists the different fasteners that you can use to mount the wall mount plate. The fasteners are not drawn to actual size.

Table 10. Fastener types

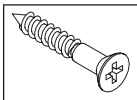 **Wood screw** Size: #12 or 5.5 mm nominal thread diameter Length: 38 mm (1.5 in.) minimum	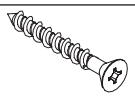 **Concrete Anchor** Size: 5 mm (3/16 in.) nominal thread diameter Length: 32 mm (1.25 in.) minimum Note: Fastener has a high/low thread that cuts its own threads.
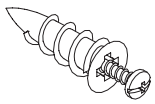 **Self-Drilling Drywall Anchor** Screw size: #8 or 4 mm nominal thread diameter Types: E-Z Anchor 50# (22 kg) pullout rating or Cobra WallDriller	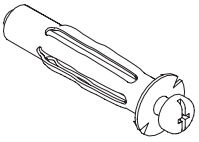 **Hollow Wall Anchor** Screw size: 5 mm (3/16 in.) nominal thread diameter Note: Metal casing size is dependent on wall board thickness. During installation, grip head of metal casing with pliers when initially tightening the screw to flare the legs. "No drill" or "drive" types are not recommended.
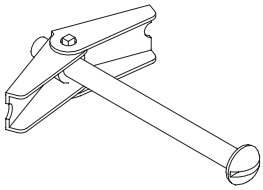 **Toggle Bolt** Screw size: 5 mm (3/16 in.) nominal thread diameter	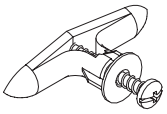 **Plastic Toggle Bolt** Screw size: #8 or 4 mm nominal thread diameter Note: Toggle size is dependent on wall board thickness.
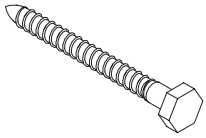 **Lag Screw** Screw size: 6.3 mm (1/4-in.) or nominal thread diameter Length: 2.5 in. or 60-mm minimum	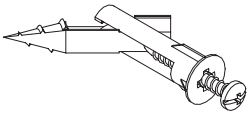 **Self-Drilling Drywall Toggle Bolt** Screw size: #8 or 4-mm nominal thread diameter

Chapter 4. Removing and replacing FRUs

Note: Procedures in this section should be performed by qualified service personnel.

Reviewing the IBM AnyPlace Kiosk assembly

Figure 19 on page 37 summarizes the field replaceable parts of the IBM 4838 assembly. The part number associated with each FRU is located in Appendix A, “Field-replaceable units.”

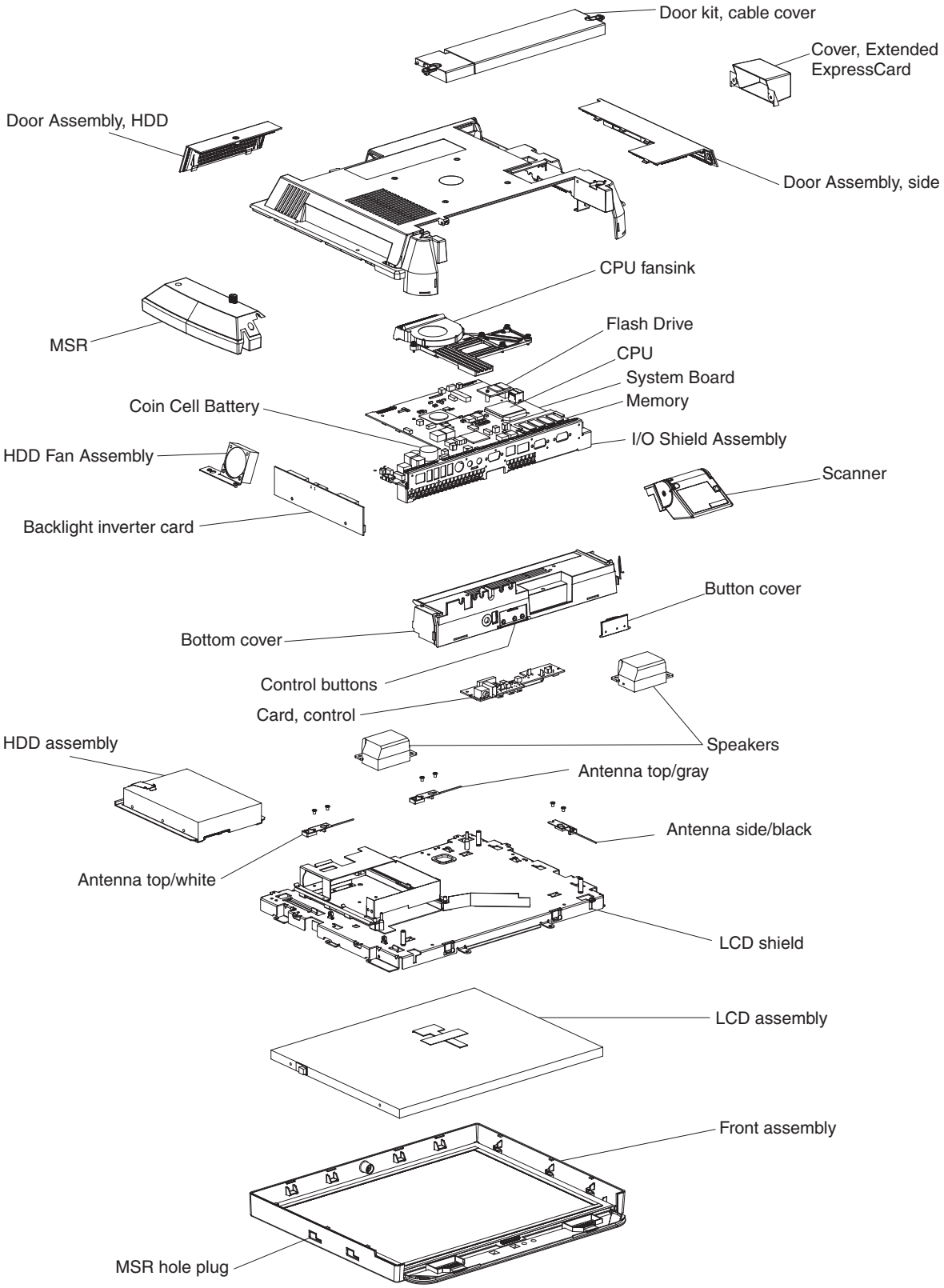

Figure 19. Exploded view of the IBM AnyPlace Kiosk assembly

Before you begin

Always practice safety first. Before removing the rear cover (or performing any removal procedures), follow these steps:

1. Power off.
2. Remove the power cable.
3. Place the unit on a sturdy surface.

Removing the rear cover

Attention: Establish personal grounding before touching this unit. See "Electrostatic discharge" on page 94.

Follow these steps to remove the rear cover:

1. Switch OFF the power to the IBM AnyPlace Kiosk. Unplug the power cord from the external power source.
2. Remove the unit from the VESA mount (tabletop, wall, or third party).
3. If installed, remove the MSR. Place the IBM 4838 face down on a sturdy surface.
4. One captured screw secures the rear cover to the unit. Locate and loosen this screw (see **H** in Figure 3 on page 10) .

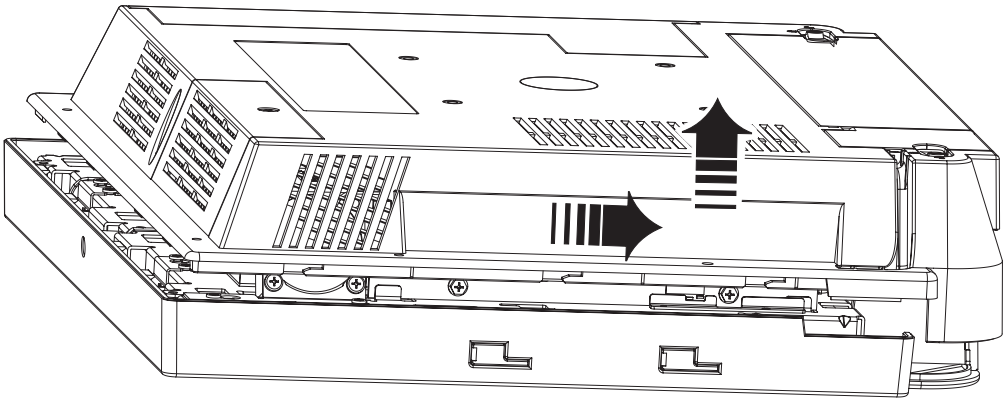

Figure 20. Removing the rear cover

5. Facing the rear of the unit, firmly grasp and slide the rear cover approximately 8 mm (0.3 in) toward the bottom of the unit. Lift to remove.

To replace the cover, follow these steps:

1. Place the unit face down on a steady surface and align the back cover approximately 8 mm (0.3 in) lower than the top cover (see Figure 20).
2. Firmly slide the back cover to align it with the front bezel and the top screw hole. Check that the edges of the rear cover are properly aligned with the mating covers.
3. Tighten the captured screw.

Removing the backlight inverter card

Follow these steps to install the backlight inverter card:

Note: The backlight inverter card and the LCD can be replaced independently. It is not necessary to replace both parts should one part require servicing.

1. Switch OFF the power to the IBM AnyPlace Kiosk. Unplug the power cord from the external power source.
2. Remove the rear cover as described in "Removing the rear cover."

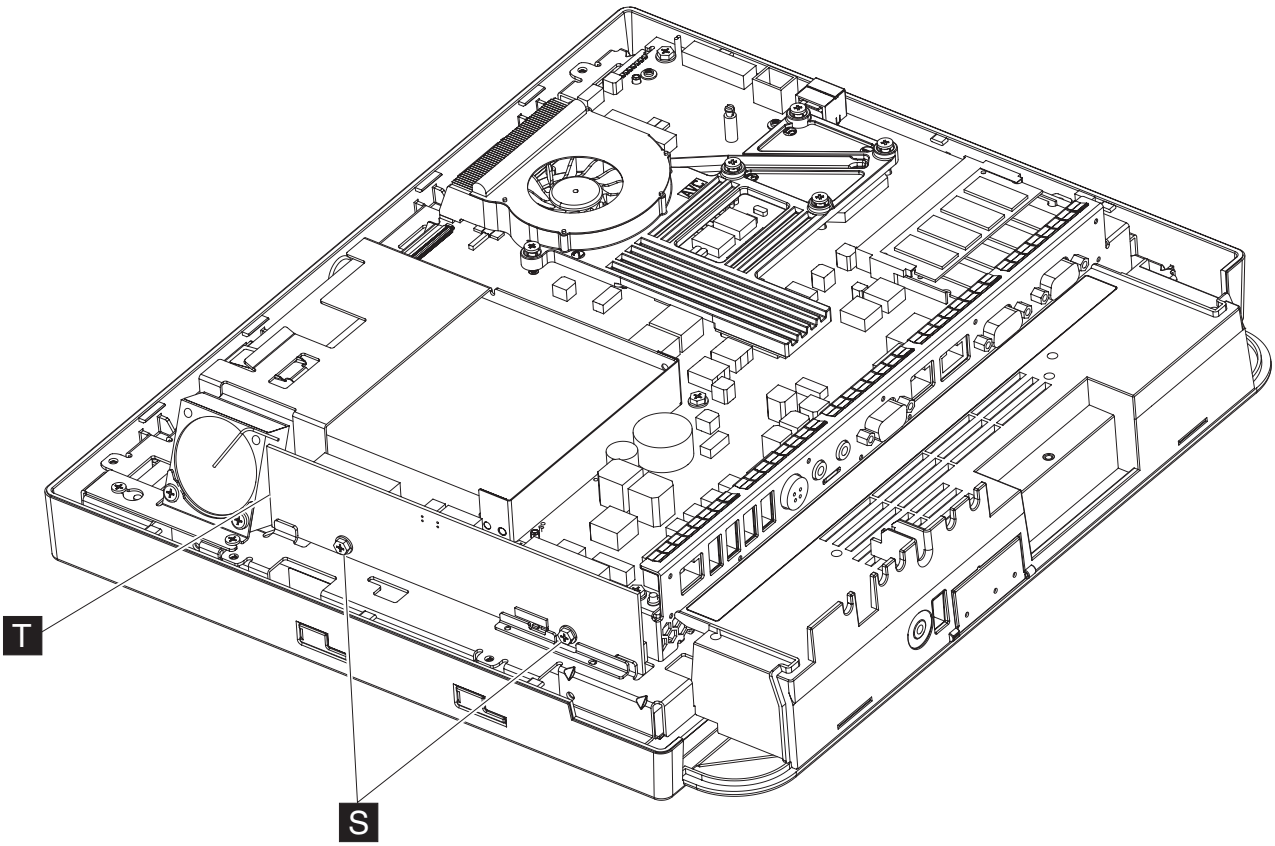

Figure 21. Backlight inverter card

3. Disconnect the two cables (system board cable and the Extended Display Identification Data (EDID) cable) from the backlight card.
4. Remove the two screws (**S**) that hold the backlight inverter card (**T**).
5. Remove card to access and detach the two or four LCD backlight cables.
6. Lift the card to remove.
7. To replace, reverse this procedure.

Removing the hard disk drive assembly

Attention: Establish personal grounding before touching this unit. See "Electrostatic discharge" on page 94.

Follow these steps to remove the hard disk drive assembly:

1. Switch off the power to the IBM AnyPlace Kiosk. Unplug the power cord from the external power source.
2. Remove the hard drive door by loosening the captured screw (see Figure 12 on page 20).

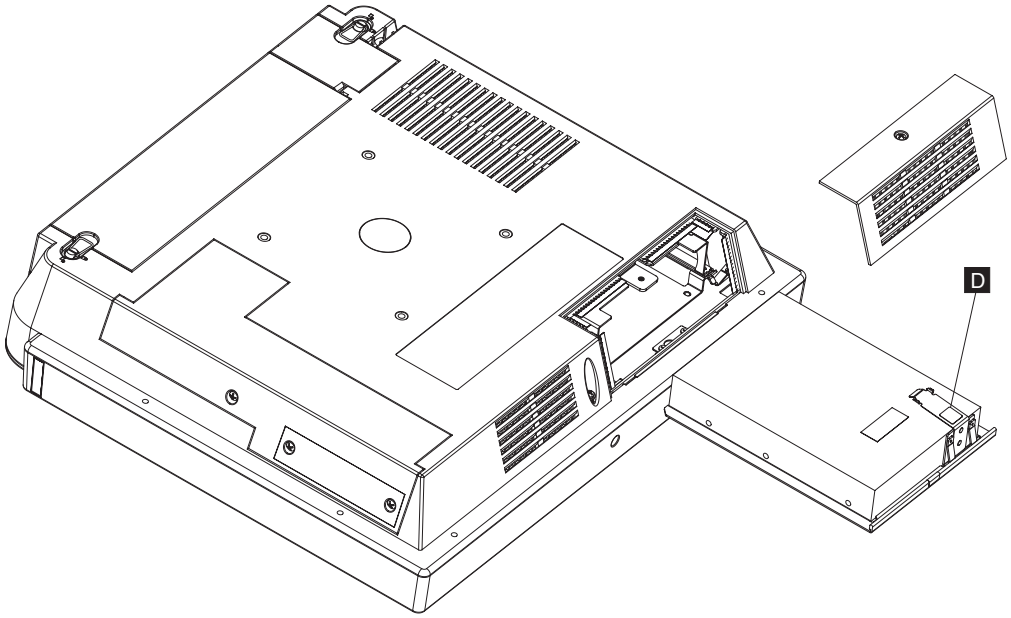

Figure 22. Removing the hard drive

3. Remove the hard disk drive assembly by pressing the drive bracket (**D** in Figure 22) downward on the latch in the area marked in blue while pulling the bracket outward.

   Note: The HDD assembly might include a circuitry card.
4. To replace, locate the right and left side rails with the correct side of the rails upward.
5. Insert the hard disk drive assembly until it is latched into place.
6. Replace the hard drive door and tighten the captured screw.

   Note: Do not overtighten the screw.

Removing the hard disk drive fan assembly

To remove and replace the HDD fan assembly, follow these steps:

1. Switch OFF the power to the IBM AnyPlace Kiosk. Unplug the power cord from the external power source.
2. Remove the rear cover as described in “Removing the rear cover” on page 39.
3. Remove the hard disk drive (“Removing the hard disk drive assembly” on page 41) to access and remove the tape securing the connector wires.
4. Detach the HDD fan connector from the system board and remove the tape securing the fan cable.

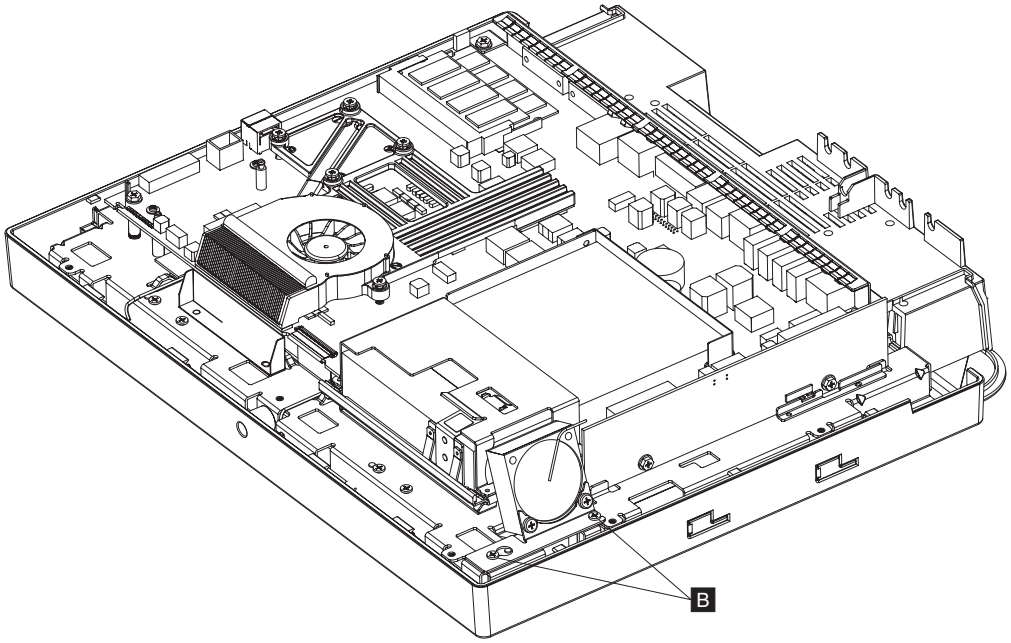

Figure 23. Removing the HDD fan assembly

5. Loosen the two fan bracket screws a few turns (**B** in Figure 23) and pull the connector wires from beneath the system board.

To replace the fan, reverse these steps.

Removing the CPU fan sink assembly

Attention: Establish personal grounding before touching this unit. See "Electrostatic discharge" on page 94.

Follow these steps to remove the CPU fan sink assembly:

1. Switch OFF the power to the IBM AnyPlace Kiosk. Unplug the power cord from the external power source.

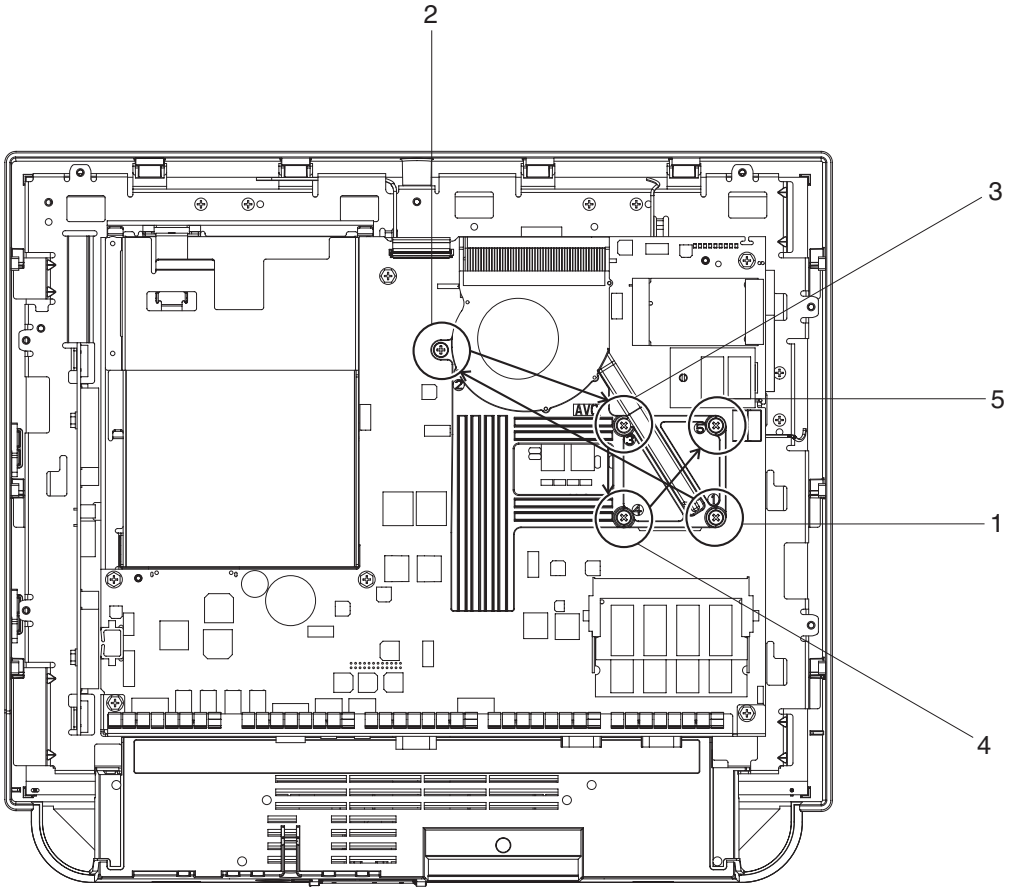

Figure 24. Removing the CPU fan sink assembly

2. Remove the rear cover. (See "Removing the rear cover" on page 39.)
3. See Figure 24 and loosen the 5 screws retaining the heat sink and fan assembly in the order that they are numbered (1 through 5).
4. Unplug the fan cable, and lift out the CPU fan sink assembly

Note: To replace the processor, go to "Removing the processor" on page 44.

To replace, follow these steps:

1. Place the CPU fan sink assembly such that it aligns the matching holes on the system board.
2. Tighten the five retainer screws **one turn in the numerical order that is shown beside of each screw**. See Figure 24.
3. Then, repeat Step 2 to secure the screws, but **do not** overtighten.
4. Plug in the fan cable.

5. Replace the rear cover.

Removing the processor

Note: Locate the processor after you remove the CPU fan sink assembly.

To remove the processor, follow these steps:

1. Switch OFF the power to the IBM AnyPlace Kiosk. Unplug the power cord from the external power source.
2. Follow the instructions described in "Removing the CPU fan sink assembly" on page 43.

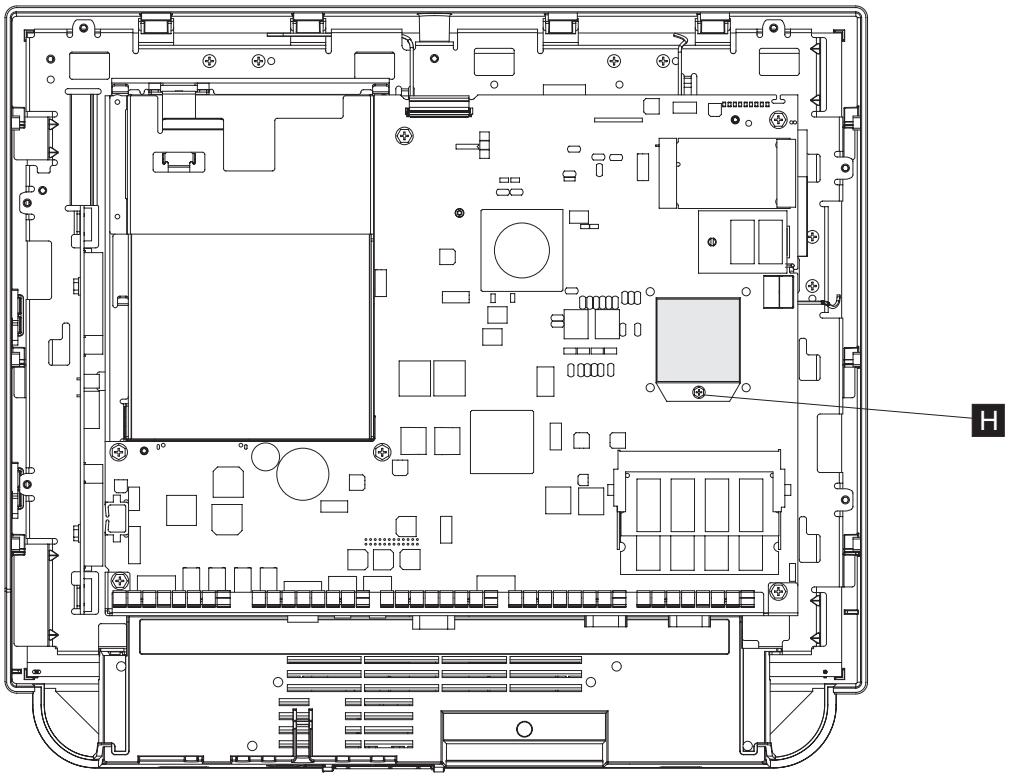

Figure 25. Removing the processor

3. Using a small flat-blade screwdriver, turn the screw (**H** in Figure 25) that holds the processor 180° (one-half turn) to release it.

   Note: The lock and unlock symbols on either side of the screw assist you with the direction of the turn.
4. Lift out the processor, carefully keeping your fingers on each side of the module.
5. To replace, reverse this procedure.

Removing the scanner and scanner window

To remove the scanner, follow these steps:

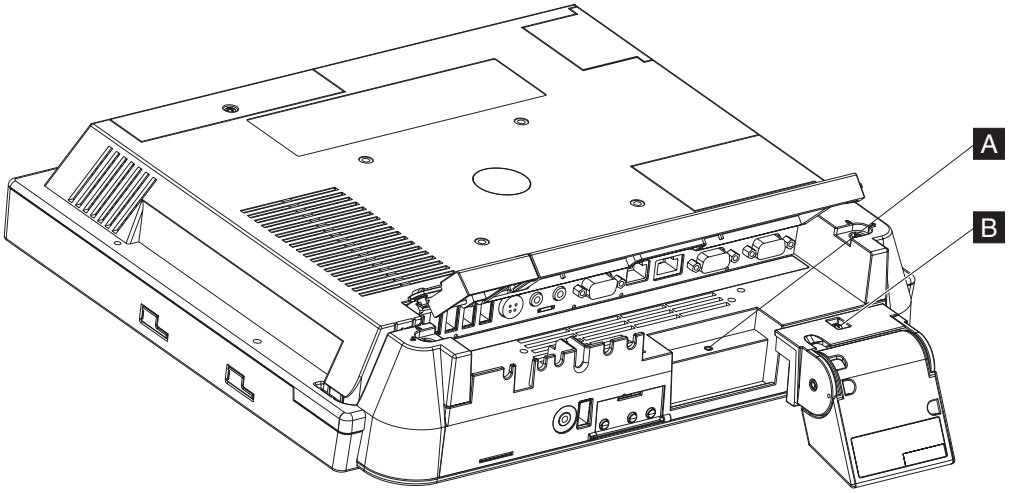

Figure 26. Removing the scanner

1. Remove the unit from the VESA mount (tabletop, wall or third party).
2. From the rear of the IBM AnyPlace Kiosk, open the cable cover using the two, one-quarter turn latches. See Figure 5 on page 12.
3. Disconnect the scanner cable from the scanner port.
4. Loosen the screw (**B** in Figure 27 on page 46) securing the scanner.

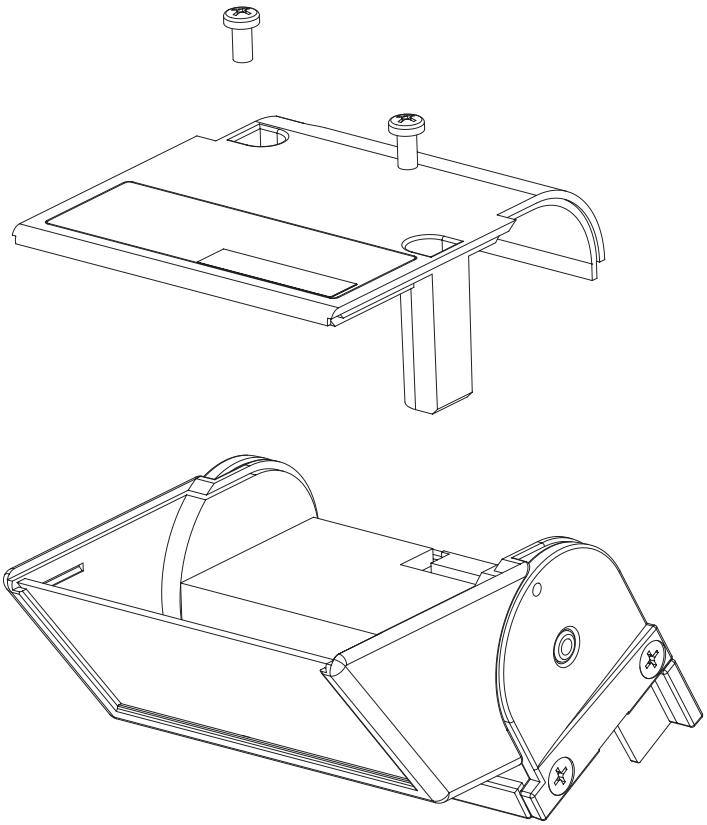

Figure 27. Removing the scanner window

To remove the scanner window, follow these steps:

1. See Figure 27. Remove the two Phillips-head scanner cover screws.
2. Remove the scanner bottom cover assembly.
3. Remove the scanner window, taking note of the window orientation.

   Note: Avoid touching the inside of the scanner window so as not to leave dust or finger prints.
4. To replace, reverse the previous procedure.

Removing the cable covers

Follow these steps to remove and replace the cable covers:

1. Open the covers as described in “Opening the cable covers” on page 12.

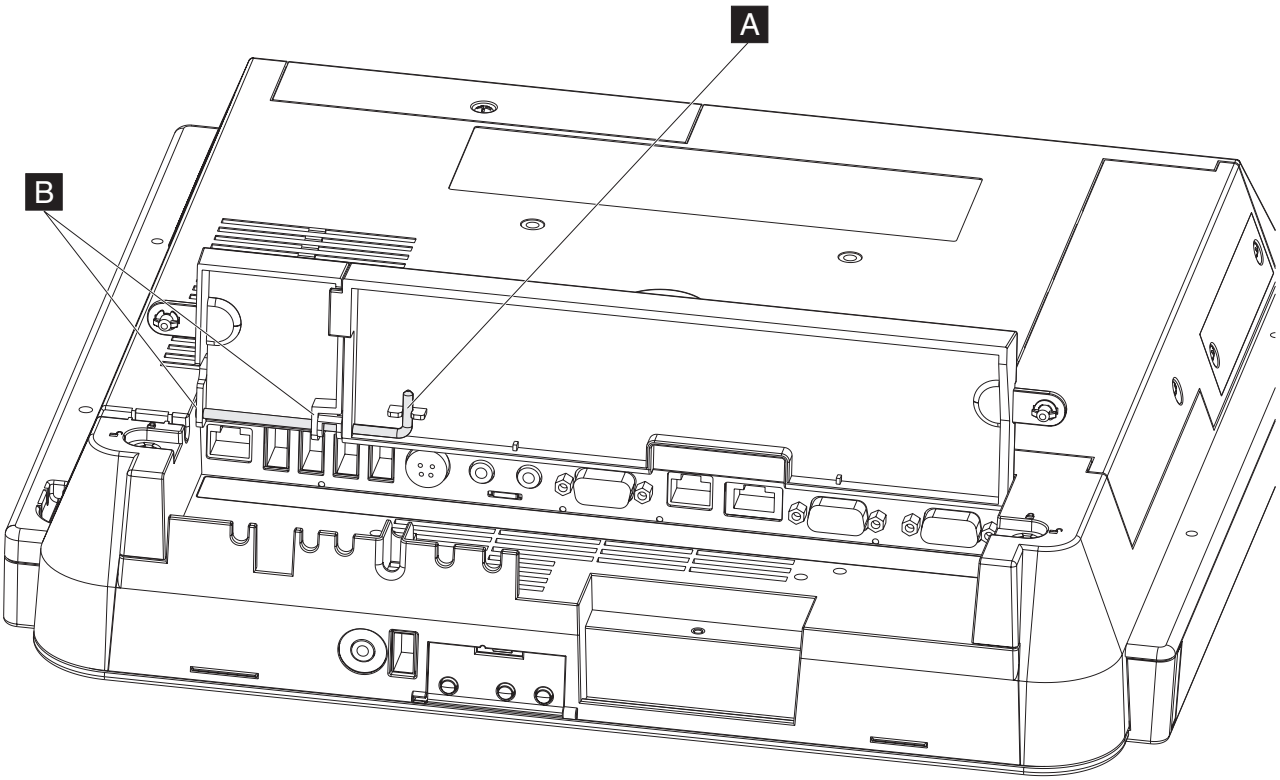

Figure 28. Removing the hinge pin

2. Remove the hinge pin (**A** in Figure 28) that holds both the MSR/USB cover and the main cable cover by rotating it downward, then sliding it to the right.
3. To replace, place the main cable cover post into the slot on the right side.
4. Hold both the MSR/USB cover and the main cable cover together while inserting the hinge pin into the holes (**B**) of both pieces.
5. Rotate and press upward to secure the hinge pin into the slot.

Locating and resetting the CMOS jumper

Follow these steps to locate and reset the CMOS jumper:

1. Switch OFF the power to the IBM AnyPlace Kiosk. Unplug the power cord from the external power source.
2. **Attention:** Establish personal grounding before touching this unit. See "Electrostatic discharge" on page 94.
3. Remove the side access door by loosening the captured screw.

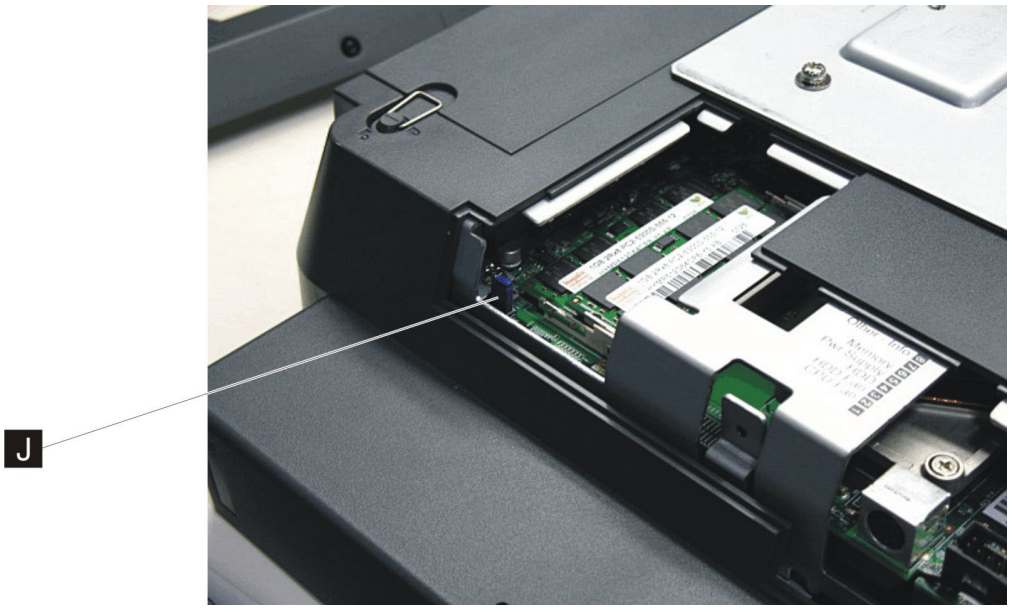

Figure 29. Location of the CMOS jumper

4. Locate the blue CMOS jumper near the memory card. See **J** in Figure 29.
5. Remove the jumper and place it on the adjacent pins and leave for 10 seconds.
6. Reinstall the jumper to the original position to reset defaults.
7. Install the side door, and tighten the screw.

   Note: Do not over tighten the screw.

Removing the memory card

Attention: Establish personal grounding before touching this unit. See "Electrostatic discharge" on page 94.

Follow these steps to remove the memory card:

1. Switch OFF the power to the IBM AnyPlace Kiosk. Unplug the power cord from the external power source.
2. Loosen the captured screw holding the side access door.

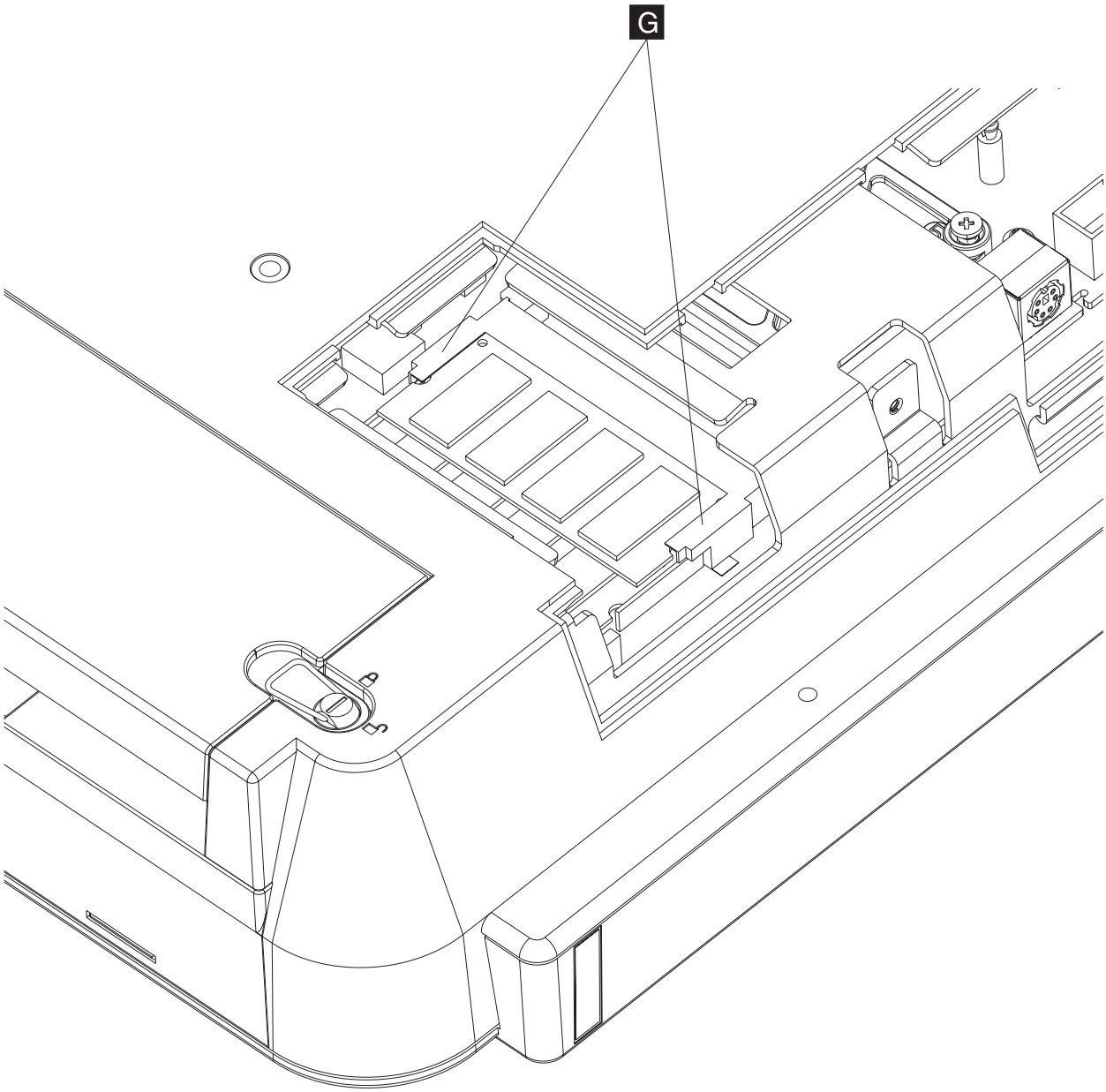

Figure 30. Removing the memory card

3. Gently pull outward on the two side latches holding the memory card (G in Figure 30). The memory card pops upward so that you can lift the card from the slot.

Note: If you need more clearance to remove the memory card, remove the rear cover (see "Removing the rear cover" on page 39.)

4. To replace the memory card, reverse these steps.

Note: Do not over tighten the side door screw.

Changing the battery

Attention: Establish personal grounding before touching this unit. See "Electrostatic discharge" on page 94.

Note: The coin cell system board battery is a Lithium Manganese Dioxide battery.

Follow these steps to change the battery:

1. Switch OFF the power to the IBM AnyPlace Kiosk. Unplug the power cord from the external power source.
2. Remove the rear cover as described in "Removing the rear cover" on page 39.

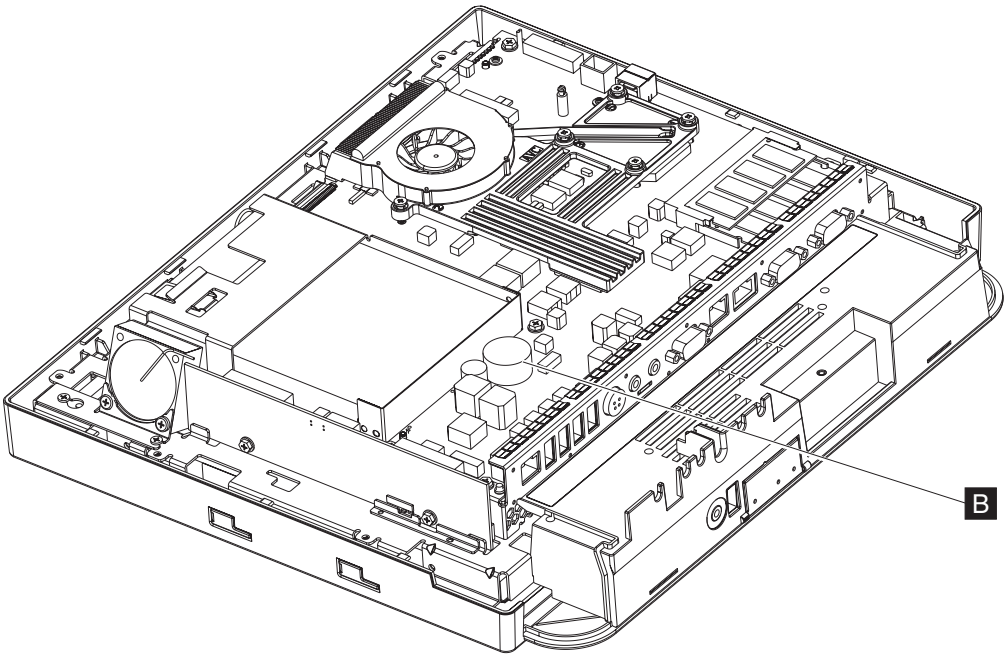

Figure 31. View of battery

3. Locate the battery on the system board (**B** in Figure 31).
4. Using your finger, press on one of the tabs holding the coin battery, and the battery pops out.
5. To replace the battery, align the battery underneath the tabs and press down.

Removing the flash drive

Follow these steps to remove the flash drive:

1. Loosen the captured screw on the side access door and lift to remove.

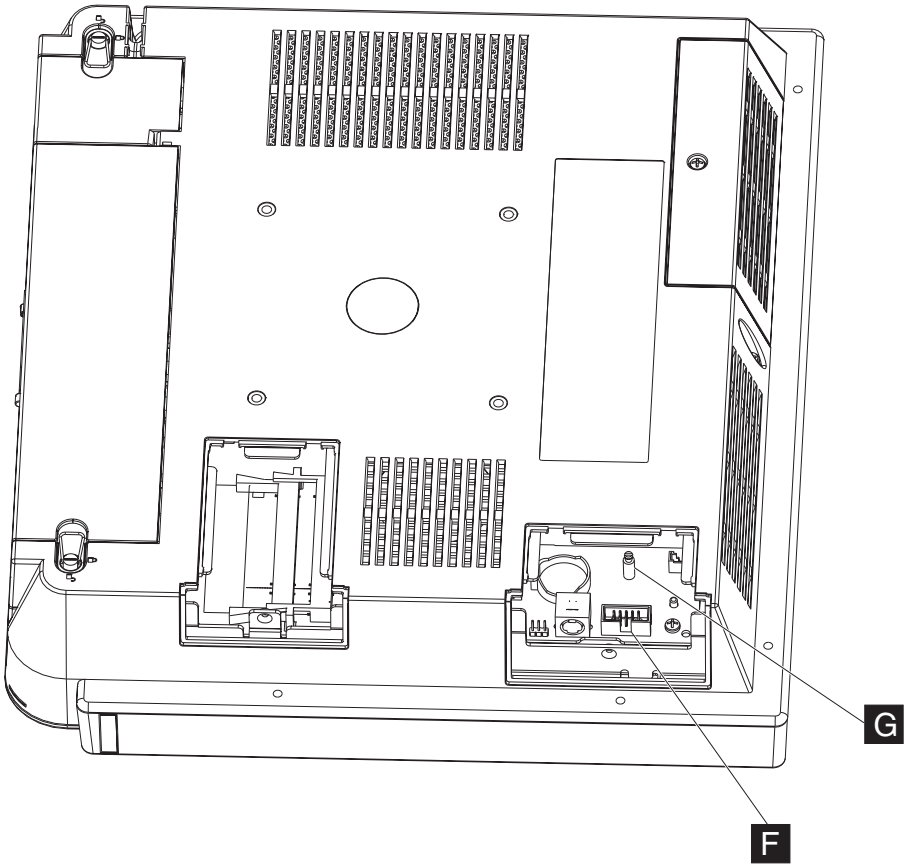

Figure 32. Location of the flash drive

2. Locate the flash drive connector (**F** in Figure 32) and lift up to remove the plug-in flash drive.

Removing the system board

Attention: Establish personal grounding before touching this unit. See "Electrostatic discharge" on page 94.

Follow these steps to remove the system board:

1. Switch OFF the power to the IBM AnyPlace Kiosk. Unplug the power cord from the external power source.
2. Remove the rear cover as described in "Removing the rear cover" on page 39.
3. Follow the steps in Figure 22 on page 41.
4. Detach the following cables from the system board:
   - Backlight inverter card
   - Touch assembly
   - HDD fan

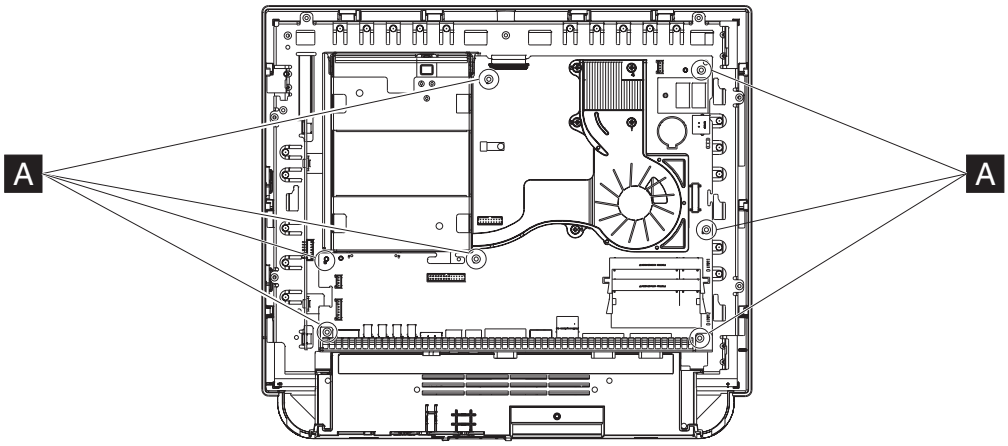

Figure 33. Removing the system board

5. If installed, remove the wireless card, leaving the three antenna cables attached.
6. See Figure 33 and remove the 6 non-captured screws (A) that hold the system board.
7. Detach the control card cable and LCD LVDS cable. Both are located on the back side of the system board.
8. Remove the following components from the defective system board for later installation:
   - Heatsink and fan assembly: "Removing the CPU fan sink assembly" on page 43
   - Processor: "Removing the processor" on page 44
   - Memory: "Removing the memory card" on page 49
   - Flash drive: "Removing the flash drive" on page 51
9. Carefully lift to remove.

Replacing and programming the system board

Follow these steps to replace the system board:

1. Reverse the procedures described in "Removing the system board" noting to align the board with the two alignment pins for the correct positioning.

2. Program the system vital product data. The following items are required before you begin:
   a. IBM RSS Diagnostics memory key
   b. IBM AnyPlace Kiosk BIOS update diskette or memory key
   c. IBM AnyPlace Kiosk Light-Path update diskette or memory key.

      Note: All of these required items are available on the IBM RSS support site: http://www.ibm.com/solutions/retail/store

      1) Create the IBM RSS diagnostic memory key as described by the RSS support site.
      2) Insert the memory key into the target system and power on.
      3) Allow the system to boot from the USB memory key.
      4) Accept the license agreement if you agree to the terms.
      5) Click on **Utilities**.
      6) Click on **VPD**.
      7) Update the relevant VPD information.
   d. Check the Light-Path LED's firmware level:
      1) Power on the system.
      2) After POST, a screen appears for the IBM RSS Service Processor Event log viewer. Press **<CTRL+D>** or tap the box in the center of the screen to open the utility.
      3) The current Light-Path LED's firmware level is shown.
   e. Update the system Light-Path LED's firmware. Refer to the instructions on the IBM RSS Support site.
   f. Check the system BIOS level:
      1) Power on the system.
      2) Press **<DEL>** or tap two times on the screen when prompted.
      3) Open the **Standard CMOS Items** page to view the current BIOS revision.
   g. Update the system BIOS by following the instructions on the IBM RSS Support site.

Removing the front cover/touch assembly

The front cover includes the touch assembly (touch card and housing) inside. Follow these steps to remove the front cover/touch assembly:

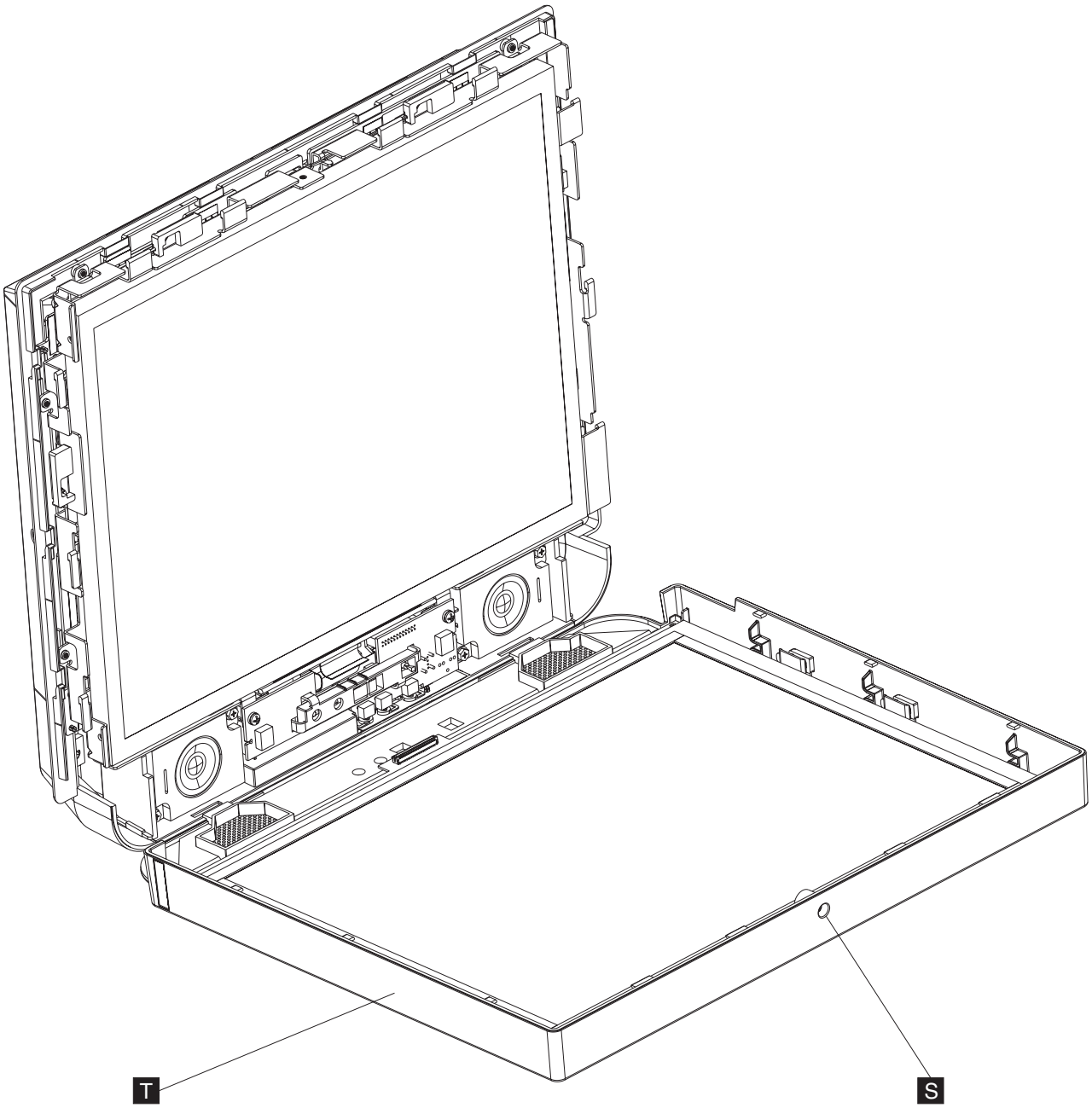

Figure 34. Removing the front cover/touch assembly

1. Switch OFF the power to the IBM AnyPlace Kiosk. Unplug the power cord from the external power source.
2. If installed, remove the MSR (see "Installing the MSR" on page 15).
3. Open the front cover/touch assembly (**T** in Figure 34) by loosening the captured screw (**S**).

4. Slide the front cover/touch assembly (hereafter referred to as the front assembly) upward approximately 8 mm (0.3 in) then rotate the front assembly downward from the LCD to open. See Figure 34 on page 55.
5. Unlatch the touch cable as follows:

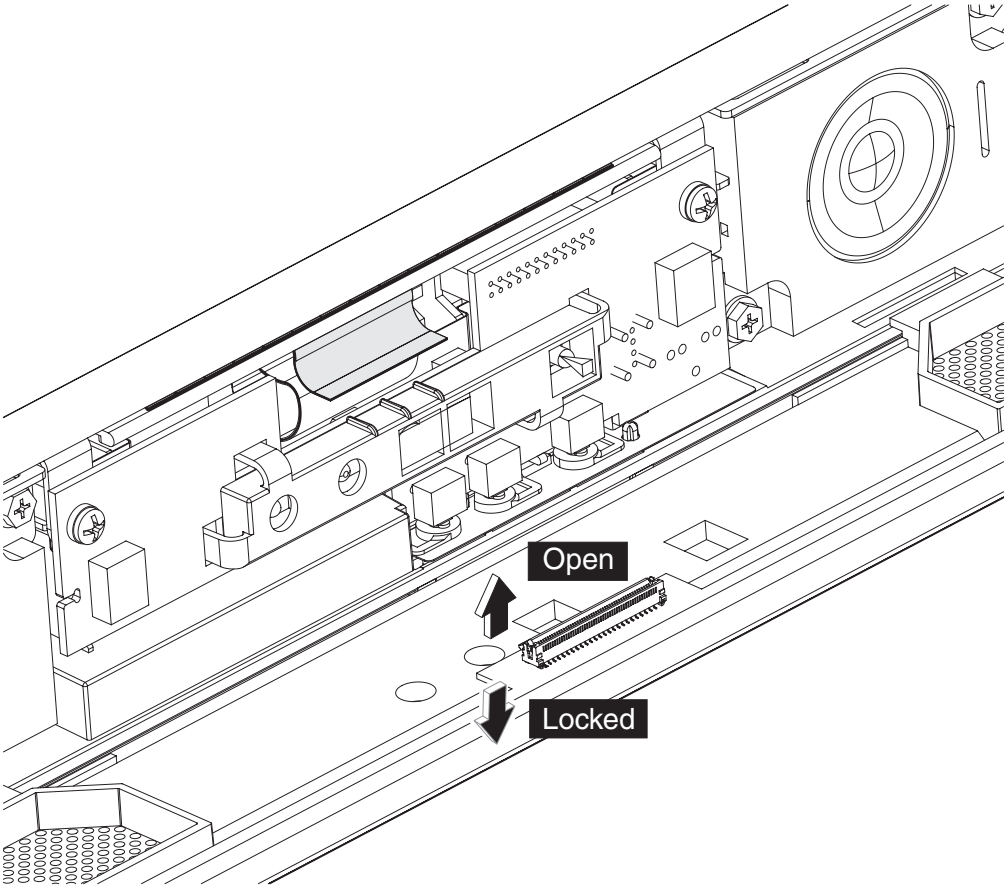

Figure 35. Locating the touch cable connector

See Figure 35. Disconnect the touch cable by moving the connector lever to the open position and lifting out the cable.

Note: See the Open and Locked connector lever positions shown in Figure 34 on page 55.

Removing the speakers

Follow these steps to remove the speakers:

1. Switch OFF the power to the IBM AnyPlace Kiosk. Unplug the power cord from the external power source.
2. Follow the steps in "Removing the front cover/touch assembly" on page 55 to remove the front assembly.
3. Remove the two screws (W in Figure 36) that retain each speaker and lift to remove.
4. Detach each speaker cable (V) from the control card.

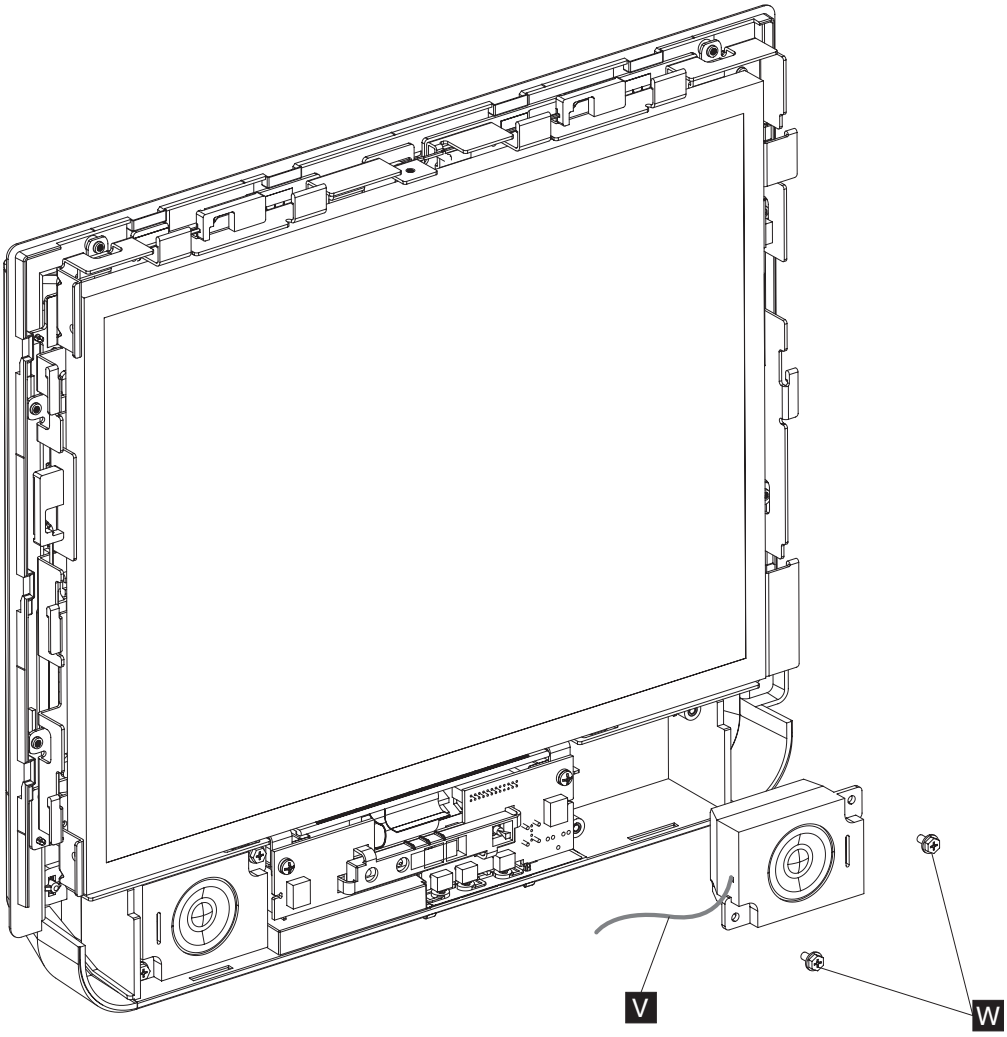

Figure 36. Removing the speakers

5. To replace, reverse these steps.

Removing the control card

The control card contains the infrared presence sensor and the LED housing. Follow these steps to remove the control card:

1. Switch OFF the power to the IBM AnyPlace Kiosk. Unplug the power cord from the external power source.
2. Remove the front assembly as described in "Removing the front cover/touch assembly" on page 55.

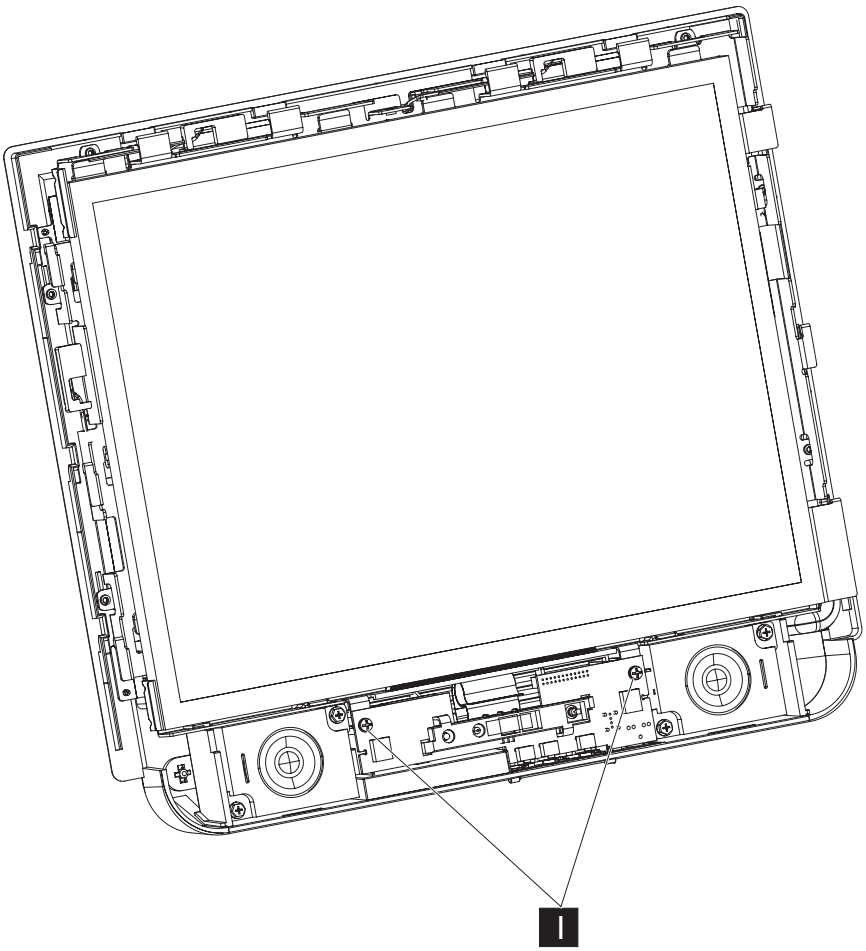

Figure 37. Removing the control card

3. Remove the two screws (I in Figure 37) that hold the control card in place, and lift out the card
4. Disconnect the two speaker cables, and the control card cable from the rear of the control card.
5. To replace, reverse this procedure, being sure to angle the card such that the control buttons line up with the button holes.

Removing the control buttons

Follow these steps to remove the control buttons:

1. Switch OFF the power to the IBM AnyPlace Kiosk. Unplug the power cord from the external power source.
2. Remove the control card as described in "Removing the control card."

3. Press inward on one end button and lift upward on that end of the button frame.
4. Then, press the center button and continue to lift upward on the frame.
5. Press on the opposite end button to freely lift the button assembly.
6. To replace, reverse this procedure.

   Note: Be sure to align the control button holes with the holes in the bottom cover.

Removing the LCD

Follow these steps to remove the LCD:

1. Switch OFF the power to the IBM AnyPlace Kiosk. Unplug the power cord from the external power source.
2. Follow the instructions in "Removing the front cover/touch assembly" on page 55.

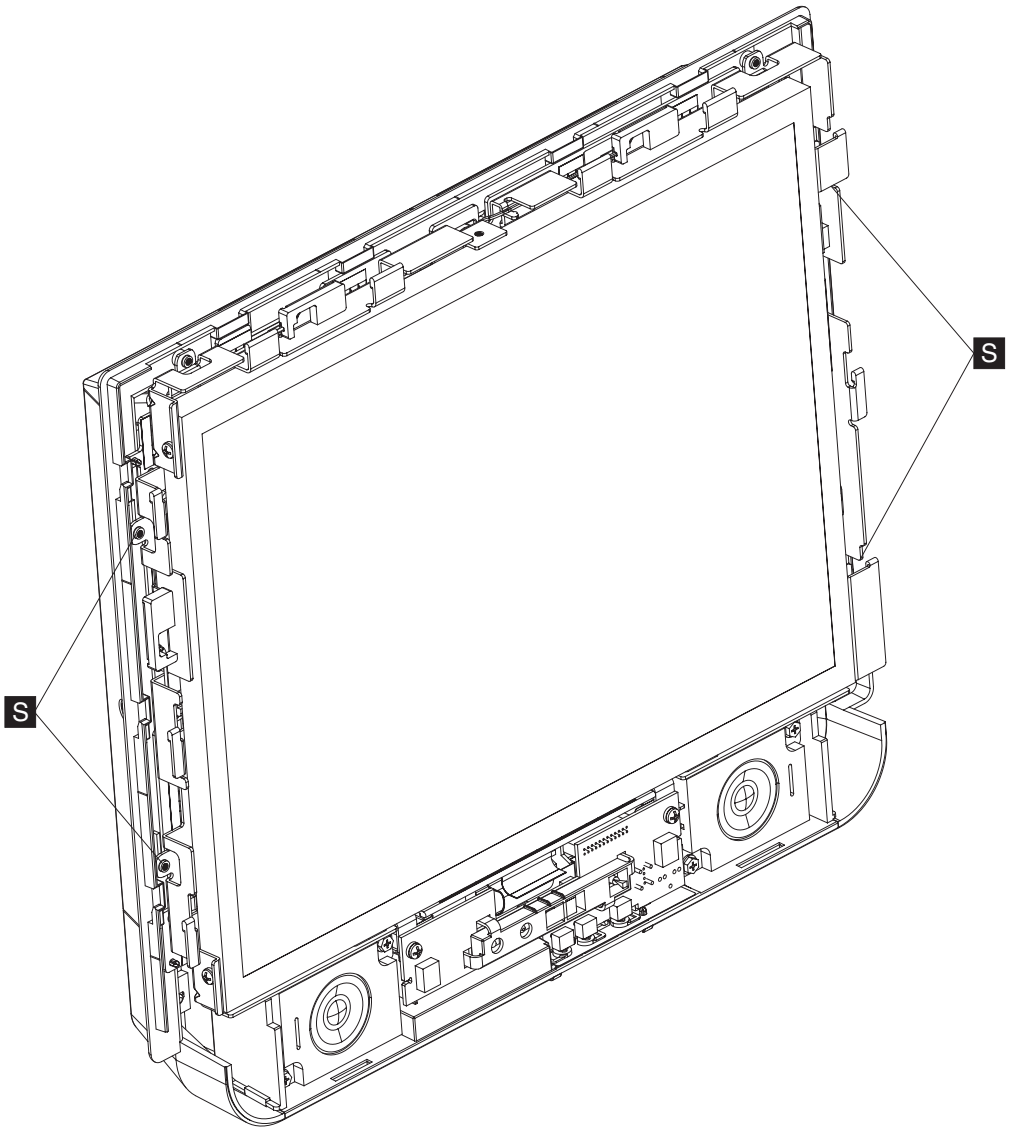

Figure 38. Removing the LCD

3. Remove the four non-captured screws (S in Figure 38) that hold the LCD to the LCD shield.
4. Disconnect the EDID card cable that is located on the right side of the LCD.
5. Gently lift up the LCD and slide to left to expose backlight cables. Rest LCD on left side of the LCD shield, and remove backlight cables (two or four) from the backlight inverter card.
6. Gently lift up LCD to expose the LVDS cable underneath and disconnect it from the LCD. Remove the LCD from the LCD shield.
7. To replace the LCD, reverse this procedure.

Removing the tabletop mount cover sets

To remove the cover set for the tabletop mount, follow these steps:

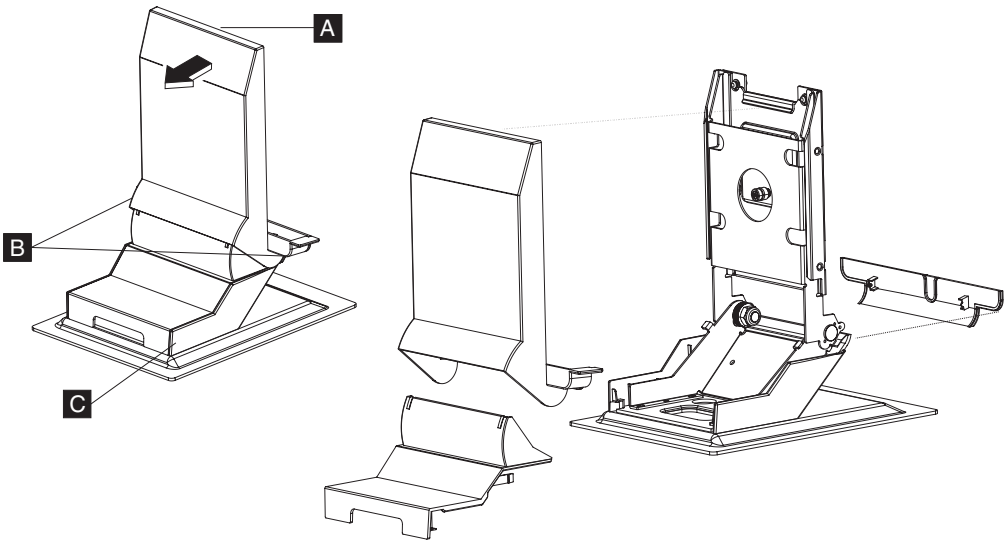

Figure 39. Removing the stand cover set

1. Tilt the upper portion of the mount so that it is 90 degrees (perpendicular) to the base of the mount.
2. Remove the upper cover (**A**) by pulling on the two finger grips on the bottom at the far left and right sides (**B** in Figure 39) in the direction shown.
3. Gently flex the hinge cover to un-snap it from the mount.
4. Remove the base cover (**C**) by pulling the cover in the direction shown.
5. To remove the plastic base housing, unfasten the four screws.

Chapter 5. Diagnosing problems and troubleshooting

A software error or a hardware failure can cause a problem with the system. The following topics contain problem analysis instructions to help you determine the cause of a problem and resolve it.

Table 11 describes the servicing task and the section that contains information supporting the task.

Table 11. IBM AnyPlace Kiosk task information

Task	Go to
Diagnosing a problem using the diagnostic processor.	"Preliminary checklist" and "Using the diagnostic processor" on page 64
Update the flash BIOS.	"Updating the flash BIOS" on page 72.
Run the CMOS Setup Utility.	"Using the CMOS Setup Utility" on page 68.
Using the IBM diagnostics for POS systems.	"Using the IBM diagnostics for POS systems and peripherals package" on page 71
Obtain the part number for a field-replaceable unit (FRU).	Appendix A, "Field-replaceable units," on page 75.
Remove or replace a FRU.	Chapter 4, "Removing and replacing FRUs," on page 35.

Researching the Knowledgebase

You can determine if a product problem has been resolved. Just review the symptoms and fixes in the knowledge base by performing the following steps:

1. Go to the IBM Retail Stores Solutions Knowledgebase Web site.
2. Enter your search criteria, for example, *kiosk*.
3. Click **Go**.

Preliminary checklist

When you power on the IBM AnyPlace Kiosk, the system performs a power-on self-test (POST). When the power LED stops blinking, POST is complete. If multiple beeps occur, perform the following steps to diagnose the problem.

1. Ensure that all AC power is connected and observe the power light to make sure that it is lit.
2. Ensure that all cables and I/O devices are connected correctly and securely.
3. Make sure that you correctly adjust the brightness setting.
4. Record any error messages or symptoms for troubleshooting.

If you do not observe a specific error indication, continue problem resolution using the diagnostic processor (see "Using the diagnostic processor" on page 64) and "Troubleshooting other hardware conditions" on page 67.

Notes:

1. For internal options and peripheral devices, you can use the diagnostics to help resolve problems.

2. For devices with separate test instructions, refer to those instructions when testing.
3. When using application software, you can receive error messages that pertain to the software. See the software manual for a description of those messages.

Using the diagnostic processor

The system unit contains a diagnostic processor that assists in the diagnosis of common hardware field problems. This task is accomplished using:

- Diagnostic LEDs
- System Event Log Viewer

Understanding the light path LEDs

Table 12 describes the light path LEDs and the component or process each LED represents. This table also describes the possible conditions and actions for you to resolve the condition.

Table 12. Diagnostic processor LEDs

LED	Component or process	Conditions when blinking	Action
2	CPU fan	• The CPU fan temperature has exceeded 90° C. • The fan is no longer spinning.	1. Check the CPU vent for blockages or dust build up. 2. Ensure that the fan is plugged into the system board. 3. Make sure that no obstacle is preventing the fan from spinning.
3	HDD fan	• The HDD temperature has exceeded 60° C. • The fan is no longer spinning.	
4	HDD	The HDD failed the hard disk health check.	1. Check that the HDD connection to the system. Make sure that it is secured and completely engaged in the drive bay. 2. If the HDD presence or type change is intended, no failure occurred. Reset the system event log to clear the failure.
5	Power supply	The power supply input voltage is operating outside supported parameters.	Check the system power supply to ensure that it is supplying the correct and supported voltage. If not, replace the power supply.
6	Memory	A memory DIMM in the system failed the POST memory test.	Test the memory DIMM with the IBM Retail Store Solution diagnostic to ensure that it is not defective. If defective, replace.
8	Information	An event has occurred and is waiting to be cleared from the system event log.	View the Warning/Information attribute in the system event log. When finished, clear the system event log to reset the information LED.

Table 12. Diagnostic processor LEDs (continued)

LED	Component or process	Conditions when blinking	Action
Amber power indicator	Hardware failure light	The hardware failure light is combined with the system power LED that is located on the front of the system. When any one of LEDs 2 through 6 illuminate, then the green power LED becomes inactive and the yellow hardware failure light illuminates. **Note:** The Information LED (8) will not cause the hardware failure light to illuminate.	

Using the system event log viewer

The system event log viewer is a BIOS POST (power on start) plug-in that provides access to the system event log. Follow these steps to view the system event log:

1. Power on the system and wait for the system event log viewer (Figure 40) screen to appear.

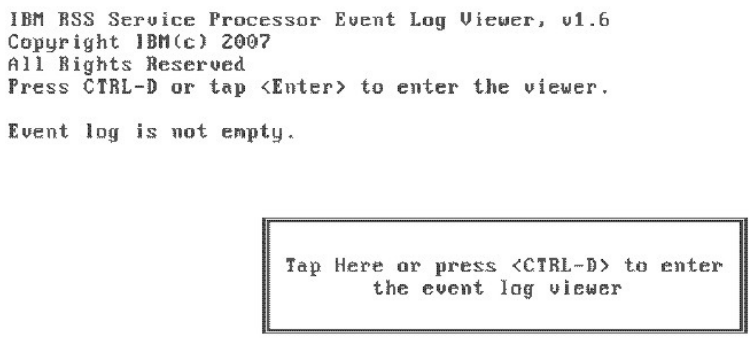

Figure 40. System event log viewer screen

2. Tap the center box or press CTRL+D to open the system event log viewer. A screen similar to Figure 41 on page 66 appears.

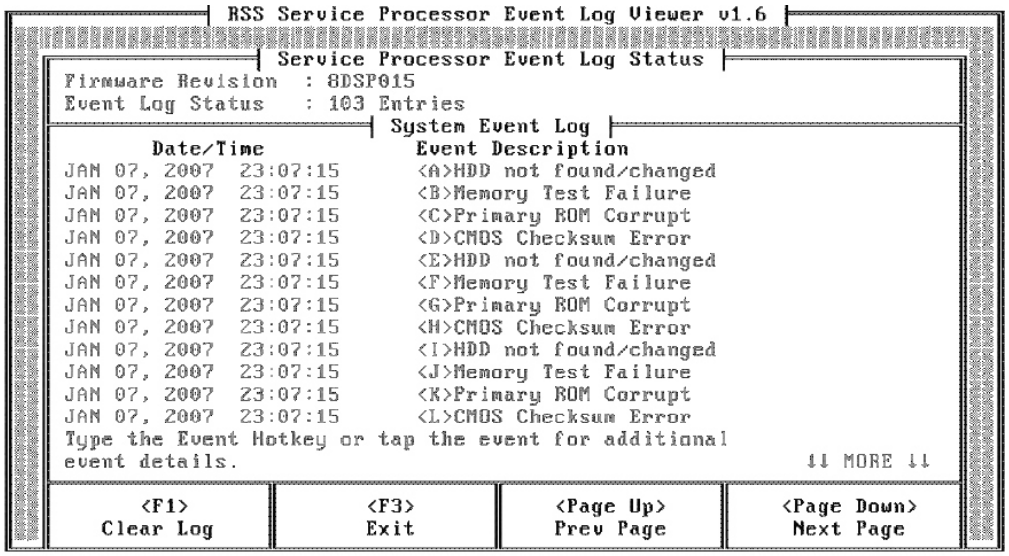

Figure 41. Example of saved events screen

3. For additional details of a saved event, use the touch screen to tap and open the event, or use an optionally attached keyboard. You can also press the event hot key.

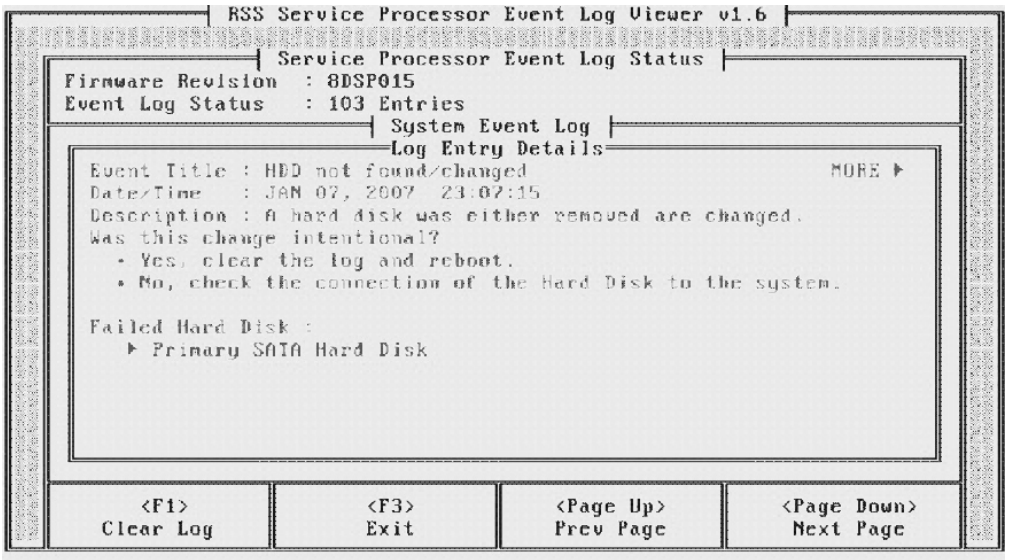

Figure 42. Example of saved event details

4. Follow the prompts on the screen to view events or to clear the system event log.

Notes:

1. All saved events can be viewed.
2. Events are logged by event date: most recent to oldest.
3. If the event log reaches its capacity, the oldest events are deleted.

Troubleshooting other hardware conditions

Condition description	Resolution
The power indicator on the front of the unit is off.	1. Ensure that the 4838 is powered on by depressing the power button on the terminal. **Note:** When the system is off but is connected to a receptacle, the power LED will blink very slowly. This slow blinking indicates that the system is receiving power. 2. Check that you have power at the outlet. 3. Check that the AC cord is connected to the power supply and the outlet. 4. Check that the power input connector is firmly connected. If the condition persists, follow these steps: 1. If the unit is receiving power, remove the rear cover and ensure that all cables and circuit boards are fully seated in the connectors. 2. Replace the control panel card. 3. Replace the system board.
The display is blank and the system is beeping.	1. Check the system memory to ensure that the memory control card is seated properly. 2. Replace the memory SO-DIMM.
Touch display not responding to touch	1. Make sure that you use an object approximately the width of your finger to touch the screen. 2. Run the diagnostics. 3. Check to ensure that the cables internal to the unit are correctly attached to the 4838 and to the system. 4. If condition, persists, replace the front bezel and touch assembly. 5. If condition continues, replace the system board[1].
Totally blank display	1. Check that the power indicator for the display is ON. If not, go to the first condition listed in this table. 2. Check the brightness controls. 3. Check the cable connections, and replace the cables, if necessary. 4. Replace the inverter card. 5. If condition persists, replace the system board[1].

Condition description	Resolution
Unacceptable image quality	1. Ensure that the video mode is set for 1024 x 768 (15 inch models), or 1280 x 1024 (17 and 19 inch models). 2. Run the diagnostics. See "Using the IBM diagnostics for POS systems and peripherals package" on page 71.
Magnetic stripe reader (MSR) malfunctioning	1. Check that the cable is securely connected. 2. Run the MSR test using the service diskette. 3. Replace the MSR.
Tabletop mount tilts too easily	1. Check the force necessary to tilt the display when pressing at the top of the LCD. It should be at least 2.2 kg (5 lb.). 2. If the tilt force is not at least 2.2 kg (5 lb.), replace the mount.

Note: [1]A corrupted CMOS can cause unpredictable problems. Before exchanging the system board to resolve a problem, go to "Clearing the CMOS settings" on page 70 and reset CMOS. Clearing CMOS ensures that all BIOS settings are configured to a known, functional state.

Using the CMOS Setup Utility

Follow these steps to start the CMOS Setup Utility:

1. Switch the power ON.
2. Press **Del** during POST when prompted, or **tap the touch screen two times**. Use the keys listed in the legend bar at the bottom of the screen to make your selections or exit from the current menu. The help window on the right side of each menu displays the online help information for the currently selected item.

Figure 43 on page 69 is an example of the initial panel that is displayed in the CMOS Setup Utility.

Using the Main window

Use the Main window (Figure 43 on page 69) to access the various features of the CMOS utility. The navigation tool bar is located at the bottom of the screen.

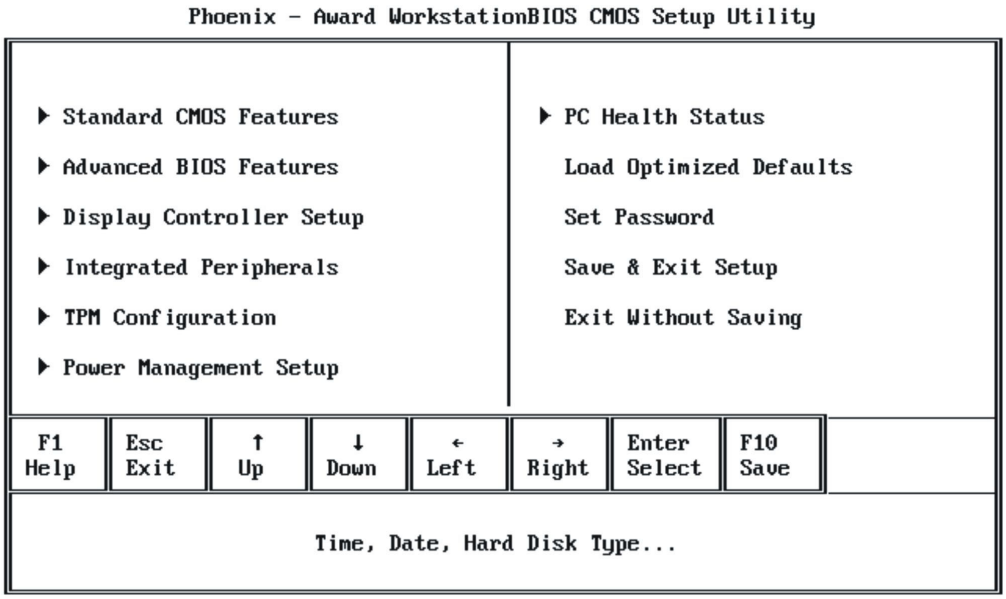

Figure 43. CMOS Setup Utility main window

Standard CMOS features

This menu provides basic functions, like setting the time and date. It also provides basic information, such as BIOS version, Ethernet MAC address, memory size, and system serial number.

To change the date, month, and time using the CMOS Utility,

1. With the month entry highlighted (in red), touch the red numeric keyboard to indicate the current month. For example, enter 8 to change the month to Aug.
2. Touch enter. The correct month appears as text.
3. Using the displayed keyboard, enter the number of the month. For example, enter 8 for August, or 1 for January, and select Enter.

Advanced BIOS Features

The Advanced BIOS window allows you to modify the POST and boot device settings, and set the keyboard features.

Integrated peripherals

Using this menu you can configure I/O devices, such as serial ports, Ethernet, parallel port, USB controller, and keyboard.

Power Management

Use the Power Management window to configure Wake on Ring, the power savings, hard disk time-out, video time-out, and other power settings.

Wake on Ring: Use the Power Management Setup menu to enable the **Wake on Ring** feature. Wake on Ring allows a modem attached to Serial Port D to wake the system using **Ring Indicate**. Additionally, the tailgate card contains jumpers for ports A-C to optionally associate DSR (pin 1) to **Ring Indicate**.

PnP/PCI Configurations

This option allows advanced functions for PCI configuration data.

PC Health Status

This is an information window that provides the CPU and system temperatures, voltages on the system board, and fan speed.

Load Defaults

This selection resets all options to their default configuration.

Set Password

Use the password options menu to set, change, or clear the system password.

TPM Configuration

The TPM configuration enables the TPM Security module.

Restoring the default CMOS settings

To restore CMOS default settings, select Load Optimized Settings from the main menu.

Clearing the CMOS settings

The AnyPlace Kiosk uses battery-backed CMOS memory to store system settings. If the CMOS memory becomes corrupted and the system does not boot, you can restore the factory default values by following the steps described in “Locating and resetting the CMOS jumper” on page 48.

CMOS recovery

If the CMOS memory becomes corrupted and the system does not boot, restore the factory default values by following the procedure described in “Clearing the CMOS settings.”

Always reset CMOS (as described at “Restoring the default CMOS settings”) before replacing a system board to resolve a problem. This practice allows you to determine if a corrupted CMOS is the source of the trouble. A corrupted CMOS can cause unpredictable problems.

Real-time clock and CMOS

The real-time clock is a low-power clock that provides a time-of-day clock and a calendar. The clock settings are maintained by the battery when the power cord is removed. Use the CMOS Setup Utility to set the clock and calendar. See “Standard CMOS features” on page 69.

See “Changing the battery” on page 51 for the steps on replacing the battery.

Configuring the COM (communication) ports

Each COM port of the AnyPlace Kiosk is assigned a unique I/O address and IRQ. The system BIOS configures the COM ports for use by the operating system; therefore, a separate driver is not required.

Use the CMOS Setup Utility to configure the default I/O address and the IRQ. If you make modifications, ensure that each port uses a unique I/O and IRQ value. Using default values is highly recommended.

Using the IBM diagnostics for POS systems and peripherals package

Diagnostics for the IBM AnyPlace Kiosk are available on the IBM Diagnostics for POS Systems and Peripherals package. This package installs to a memory key (see "Supported memory keys" on page 72).

Note: The Diagnostics also supports IBM POS I/O on prior systems, if the BIOS supports booting from a memory key.

Locate the instructions for using this package in the README file. This package provides menu-driven tests and utilities that enable trained service technicians to configure and test the I/O devices. Locate and download the service program code from the IBM Retail Store Solutions Web site using the following steps:

1. Obtain a memory key. See "Supported memory keys" on page 72.
2. Access the IBM Retail Store Solutions Web site at: www.ibm.com/solutions/retail/store/support.
3. Select **Support** on the left side of the panel, then select **IBM AnyPlace Kiosk**.
4. Next, select **Models 5xx, 7xx, and 9xx Downloads**.
5. Download the update program to a temporary location on the PC's hard-disk drive. Run the self-extracting program and respond to the messages that display. This program writes the updates and provides instructions on inserting the memory key.
6. If you have *not* previously changed the CMOS Utility settings, you can boot into the diagnostics using the USB memory key: Insert the USB memory key and power on the system. If you have previously changed the default settings, go to Step 7.
7. If you have changed the default settings of the CMOS Setup Utility, follow these steps:
   a. Ensure that the Hard Disk is listed as the First Book Device under **Advanced BIOS Features**, **Hard Disk Boot Priority**.
   b. Power off the system.
   c. Plug the memory key into a USB port.
   d. Power on the system. The system BIOS recognizes the memory key and adds it to the lists displayed by the CMOS Setup Utility.
   e. Open the CMOS Setup Utility settings. Ensure that your settings are as follows:
      - Under **Advanced BIOS Features**, **Hard Disk Boot Priority**, ensure that memory key is listed first.
      - Under **First Boot Device**, ensure that **Hard Disk** is listed first.
   f. Save these settings and exit. The system will boot automatically using the memory key and the diagnostics program begins.

You have the option of using an attached keyboard, if available. The diagnostics program will ask you to accept the user license agreement. Click the **I Agree** button. You will be presented with a screen containing a selection menu for System Components, Point Of Sale Devices, and Utilities (for VPD, and others). Sub-menus are dynamically-tailored based upon your system—only tests available for your system type are displayed.

Supported memory keys

The following memory keys are supported by the IBM AnyPlace Kiosk:

IBM USB 2.0 (1 GB)

- FRU: 41D9746
- Part number: 41D9746

Go to www.ibm.com for details on this USB key.

PNY USB 2.0 (1 GB)

- Part number: P-FD01GU20-RF

Go to www2.pny.com/homepage.aspx for details on this USB key.

Updating the flash BIOS

You can update the BIOS using a USB key or using the xFlash utility.

To download the latest level of flash BIOS with a USB key, follow these steps:

1. Obtain a memory key. See “Supported memory keys.”
2. Access the IBM Retail Store Solutions Web site at: www.ibm.com/solutions/retail/store/support.
3. Select **Support** on the left side of the panel, then select **IBM AnyPlace Kiosk**.
4. Next, select **Models 5xx, 7xx, and 9xx Downloads**.
5. Extract the self-extracting USB memory key image to a USB memory key.
   a. Execute the USB Memory Key self-extraction program.
   b. Select "Extract" from the menu.
   c. Insert the target USB memory key when prompted.
   d. Follow the prompts on the screen.
6. Insert the USB memory key in to a USB port on the target system.
7. Power on the system and allow the system to boot from the memory key.

   Note: The BIOS setup boot order might need to be configured to boot from the USB memory key.
   NOTE:
8. After the update completes, the system boots from the memory key, the flash BIOS update occurs.
9. Remove the memory key. The new BIOS update is on the system.

Note: The flash utility saves and restores your CMOS setting.

Power interruption during flash BIOS update procedure

If power is interrupted during the flash BIOS update procedure, the BIOS could become corrupted. Should this event occur, the system boots automatically from a backup copy of BIOS. To repair the corrupt version of BIOS and return to using the normal BIOS, repeat the steps to update the flash BIOS.

Repairing the flash BIOS

Two separate copies of POST/BIOS are maintained in separate flash modules. Should the primary copy become corrupt, the system automatically runs from the backup copy when rebooted. A POST message indicates when the backup copy is in use. When this happens, it is important to perform a Flash Update, in an attempt to repair the primary copy and preserve the backup functionality. If the

primary is permanently damaged, the system runs normally, but without backup capability for the BIOS, and the POST message appears at each boot up.

Using the xFlash utility

The xFlash utility is available for the IBM AnyPlace Kiosk Models 5xx, 7xx, and 9xx and supports the following operating systems:

- Windows 2000 Professional
- Windows XP Professional
- Windows Vista

Follow these steps to install the utility:

Note: For either installation (silent or not), you must login with Administrator privileges.

1. Copy the BIOS update executable to the target system (or copy the update to memory key to be inserted in the target system).
2. Boot the Windows operating system.
3. Execute the BIOS update executable and follow the displayed prompts and instructions.
4. Reboot when instructed to complete installation.

For silent installation, follow these steps:

1. Copy the BIOS update executable to the target system (or copy the update to memory key to be inserted in the target system).
2. Boot the Windows operating system.
3. Execute the BIOS update executable with the parameters `-s -a -s`.
4. After the update is completed, reboot the system. The update is then applied.

Cleaning the touch screen

Keep the touch screen free from dirt and dust to allow the touch sensor to operate efficiently. Follow these guidelines:

Note: Before cleaning the touch screen, power off the 4838 Anyplace Kiosk.

1. Use a soft, dry cloth (or non-abrasive microfiber cloth) with isopropyl alcohol.

   Attention: Do not apply cleaning solution directly to the screen. Always spray the cleaner on a clean cloth and then wipe the screen. Cleaning solutions containing abrasives,acids,ammonia or chlorine may damage the screen or plastic housing.
2. Wipe gently across the surface.
3. Allow a few minutes for the surface to dry before using.

Appendix A. Field-replaceable units

Assembly 1: IBM AnyPlace Kiosk 4838

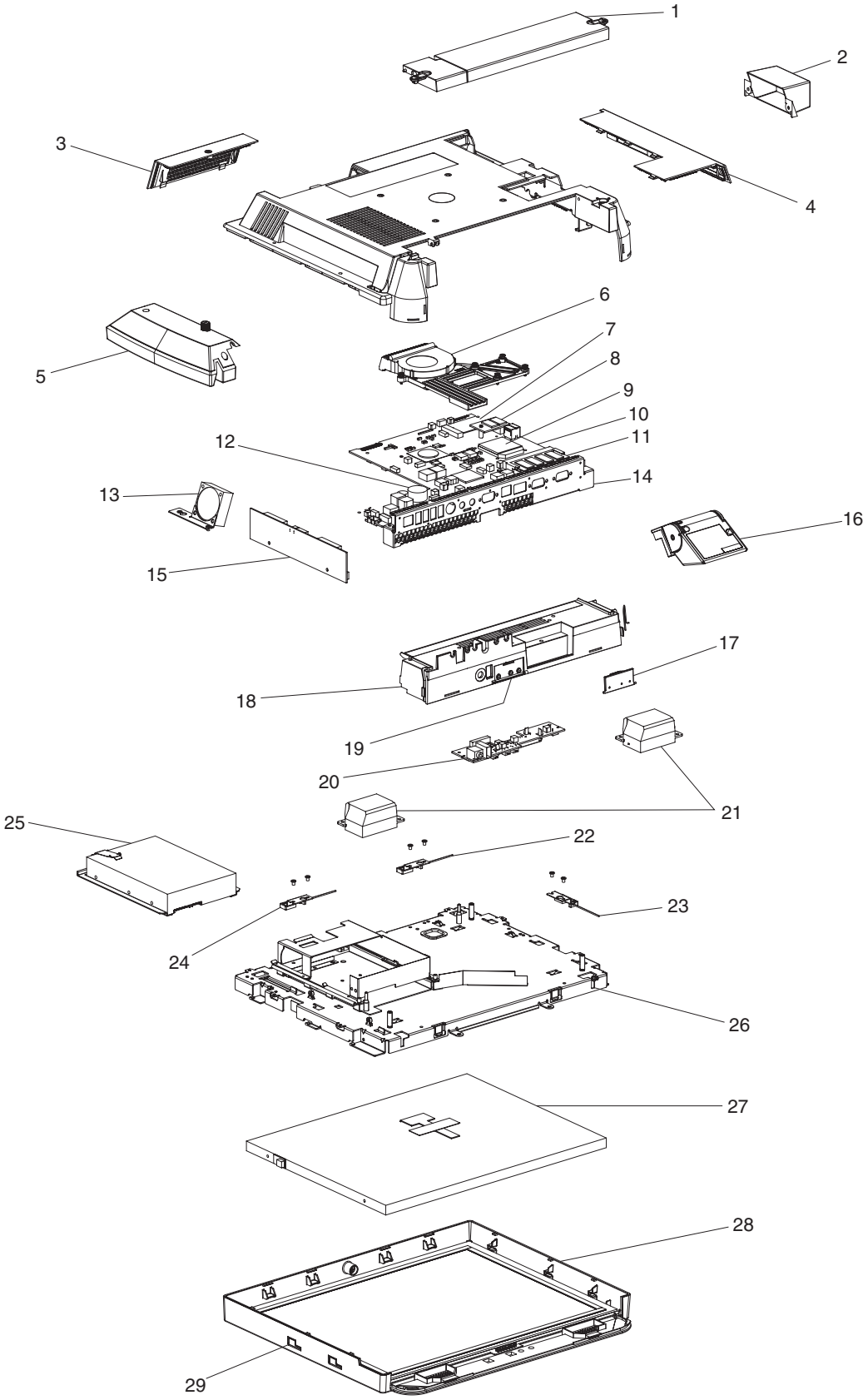

Asm–Index	Part Number	Units	Description
1–1	44V0723	1	Door kit, cable cover (includes both door assemblies, hinge pin, quarter-turn latches)
–2	44V0728	1	Cover, extended ExpressCard cover
–3	44V0758	1	Door, HDD (includes plastic, metal, screw, retainer; all assembled)
–4	44V0757	1	Door assembly, side (includes side access door with flat mini-door assembled and screw/retainer assembled)
–5	40N6636	1	MSR, 3-track
–5	40N6640	1	MSR, JUCC
–6	44V0737	1	CPU fansink
–7	44V0732	1	Card, wireless (includes installation instructions; country dependent)
–7	44V0780	1	Card, wireless (includes installation instructions; country dependent)
–7	44V0782	1	Card, wireless (includes installation instructions; country dependent)
–7	44V0786	1	Card, wireless (includes installation instructions; country dependent)
–8	44V0754	1	Flash drive, 4 GB
–9	44V0742	1	Processor, Sempron
–9	44V0743	1	Processor, Turion
–10	44V0733	1	System board (includes I/O shield) - for use only on system serial numbers KK099 and below.
–10	44V0759		System board, S3 power mode enabled (includes I/O shield)
–11	44V0746	1	Memory module, 0.5 GB, DDR2, 667 MHz, unbuffered SO-DIMM
–11	44V0747	1	Memory module, 1 GB, DDR2, 667 MHz, unbuffered SO-DIMM
–11	44V0756	1	Memory module, 2 GB, DDR2, 667 MHz, unbuffered SO-DIMM
–12	45P6222	1	Battery, coin cell
–13	44V0736	1	HDD fan assembly (includes attached bracket)
–14	44V0725	1	I/O shield assembly
–15	44V0775	1	Backlight inverter card, 15 in. LCD
–15	44V0776	1	Backlight inverter card, 17 in. / 19 in. LCD
–16	44V0717	1	Scanner, line
–16	44V0718	1	Scanner, omni (without scanner shield)
–16	44V0719	1	Scanner window
–16	44V0766		Scanner shield, omni
–17	44V0722	1	Door, control button cover
–18	44V0763	1	Bottom cover assembly, 15 in. LCD (includes assembled control buttons)
–18	44V0764	1	Bottom cover assembly, 17 in. LCD (includes assembled control buttons)
–18	44V0765	1	Bottom cover assembly, 19 in. LCD (includes assembled control buttons)
–19	57P4199	1	Buttons, control
–20	44V0734	1	Card, control (includes attached infrared sensor LED housing
–21	42J2733	2	Speakers
–22	44V0739	1	Antenna, top (gray cable)
–23	44V0738	1	Antenna, side (black cable)
–24	44V0740	1	Antenna, top (white cable)
–25	44V0948	1	HDD assembly, 80 GB (includes assembled bracket and screws)
–25	44V0949	1	HDD assembly, 160 GB (includes assembled bracket and screws)
–25	44V0947	1	HDD mounting hardware
–26	44V0772	1	LCD shield assembly, 15 in. (includes baffles, and so on.)
–26	44V0773	1	LCD shield assembly, 17 in. (includes baffles, and so on.)
–26	44V0774	1	LCD shield assembly, 19 in. (includes baffles, and so on.)
–27	44V0769	1	LCD assembly, 15 in. (includes attached EDID card)
–27	44V0770	1	LCD assembly, 17 in. (includes attached EDID card)
–27	44V0771	1	LCD assembly, 19 in. (includes attached EDID card)
–28	44V0760	1	Front assembly, 15 in. LCD
–28	44V0761	1	Front assembly, 17 in. LCD
–28	44V0762	1	Front assembly, 19 in. LCD
–29	42V3897	1	MSR hole plug

Assembly 1: (continued)

Asm–Index	Part Number	Units	Description
–			**Cables**
–	44V0750	1	Cable, touch frame
–	44V0751	1	Cable, control card
–	44V0752	1	Cable, Backlight inverter card
–	44V0753	1	Cable, EDID card
–	44V0777	1	Cable, 15 in. LCD LVDS
–	44V0778	1	Cable, 17 in. / 19 in. LCD LVDS
–	41A3531	1	Ethernet cable, CAT5E, 4.3 meter
–			**Mounting**
–	44V0727	1	Bracket, AC adapter wall mount
–	44V0710	1	Mount, tabletop (includes VESA adapter plate and installation instructions)
–	44V0716	1	Mount, wall
–	44V0714	1	Tabletop mount cover kit (includes all 5 plastic cover parts)
–	44V0715	1	Tabletop mount slot cover (covers the scanner cable slot)
–	44V0713	1	VESA adapter plate, tabletop mount
–			**Miscellaneous**
–	57P4231	1	AC power adapter
–	90X9640	1	MSR test card (3 track)
–	44V0726	1	System unit hardware kit (screws, ties, and so on.)

Power cords

Table 13. Power cords. Unless otherwise indicated, all cords are 2.5 meter.

FRU P/N	Country
39M4953	Argentina, Paraguay, Uruguay
39M4957	Anguilla, Antigua and Barbuda, Aruba, Bahamas, Barbados, Belize, Bermuda, Bolivia, Canada, Cayman Islands, Costa Rica, Columbia, Cuba, Dominican Republic, Ecuador, El Salvador, Guam, Guatemala, Haiti, Honduras, Jamaica, Mexico, Micronesia (Federal States of), Netherlands Antilles, Nicaragua, Panama, Peru, Philippines (HV use), Saudi Arabia, Thailand, Turks and Caicos Islands, United States, Venezuela, Virgin Islands
39M4962	Australia, Fiji, Kiribati, Nauru, New Zealand, Papua New Guinea
39M4966	Afghanistan, Albania, Algeria, Andorra, Angola, Armenia, Austria, Azerbaijan, Belarus, Belgium, Benin, Bosnia and Herzegovina, Bulgaria, Burkina Faso, Burundi, Cambodia, Cameroon, Cape Verde, Central African Republic, Chad, Comoros, Congo (Democratic Republic of), Congo (Republic of), Cote D'Ivoire (Ivory Coast), Croatia (Republic of), Czech Rep, Dahomey, Djibouti, Egypt, Equatorial Guinea, Eritrea, Estonia, Ethiopia, Finland, France, French Guyana, French Polynesia, Gabon, Georgia, Germany, Greece, Greenland, Guadeloupe, Guinea, Guinea Bissau, Hungary, Iceland, Indonesia, Iran, Kazakhstan, Kyrgyzstan, Laos (Peoples Democratic Republic of), Latvia, Lebanon, Lithuania, Luxembourg, Macedonia (former Yugoslav Republic of), Madagascar, Mali, Martinique, Mauritania, Mauritius, Mayotte, Moldova (Republic of), Monaco, Mongolia, Morocco, Mozambique, Netherlands, New Caledonia, Niger, Norway, Poland, Portugal, Reunion, Romania, Russian Federation, Rwanda, Sao Tome and Principe, Senegal, Serbia and Montenegro, Slovakia, Slovenia (Republic of), Somalia, Spain, Suriname, Sweden, Syrian Arab Republic, Tajikistan, Tahiti, Togo, Tunisia, Turkey, Turkmenistan, Ukraine, Upper Volta, Uzbekistan, Vanuatu, Vietnam, Wallis and Futuna, Yugoslavia (Federal Republic of), Zaire
39M4970	Denmark
39M4974	Bangladesh, Lesotho, Macao, Maldives, Namibia, Nepal, Pakistan, Samoa, South Africa, Sri Lanka, Swaziland
39M4978	Abu Dhabi, Bahrain, Botswana, Brunei Darussalam, Channel Islands, China (Hong Kong SAR), Cyprus, Dominica, Gambia, Ghana, Grenada, Guyana, Iraq, Ireland, Jordan, Kenya, Kuwait, Liberia, Malawi, Malaysia, Malta, Montserrat, Myanmar (Burma), Nigeria, Oman, Qatar, Saint Kitts & Nevis, Saint Lucia, Saint Vincent and the Grenadines, Seychelles, Sierra Leone, Singapore, Sudan, Tanzania (United Republic of), Trinidad & Tobago, United Arab Emirates (Dubai), United Kingdom, Yemen, Zambia, Zimbabwe, Uganda
39M4982	Liechtenstein, Switzerland
39M4986	Chile, Italy, Libyan Arab Jamahiriya
39M4994	Japan
39M4998	China (SAR)
39M5002	Korea (Democratic Peoples Republic of), Korea (Republic of)
39M5006	India
39M5010	Brazil
39M5014	Taiwan
39M4990	Israel
39M4956	US; required in Chicago (1.8 meter)

Appendix B. Product dimensions

This section provides a summary of the product dimensions by LCD size.

Product and peripheral summary

Table 14. IBM AnyPlace Kiosk dimensions and weights

Product	Height	Width	Depth	Weight
System with 15 in. LCD	325.6 mm (12.82 in.)	368.6 mm (14.51 in.)	72.8 mm (2.87 in.)	6.45 kg. (14.2 lbs)
System with 17 in. LCD	367.5 mm (14.47 in.)	402.0 mm (15.83 in.)	78.3 mm (3.08 in.)	8.27 kg. (18.2 lbs._
System with 19 in. LCD	398.5 mm (15.69 in.)	440.6 mm (17.35 in.)	82.8 mm (3.26 in.)	9.31 kg. (20.5 lbs)
3-track MSR	NA	Adds 43.9 mm (1.73 in.)	NA	0.18 kg (0.40 lbs.)
JUCC MSR	NA	Adds 43.9 mm (1.73 in.)		0.19 kg (0.42 lbs.)
Line scanner	Adds 67.0 mm (2.64 in.)	NA	NA	0.09 kg (0.20 lbs.)
Omni-directional scanner	Adds 67.0 mm (2.64 in.)	NA	NA	0.12 kg (0.26 lbs.)
Tabletop mount	Adds 109.0 mm (4.29 in.)	NA	NA	3.4 kg (7.50 lbs.)
Wall mount	NA	NA	Adds 26.5 mm (1.04 in.)	1.1 kg (2.43 lbs.)

Product dimensions

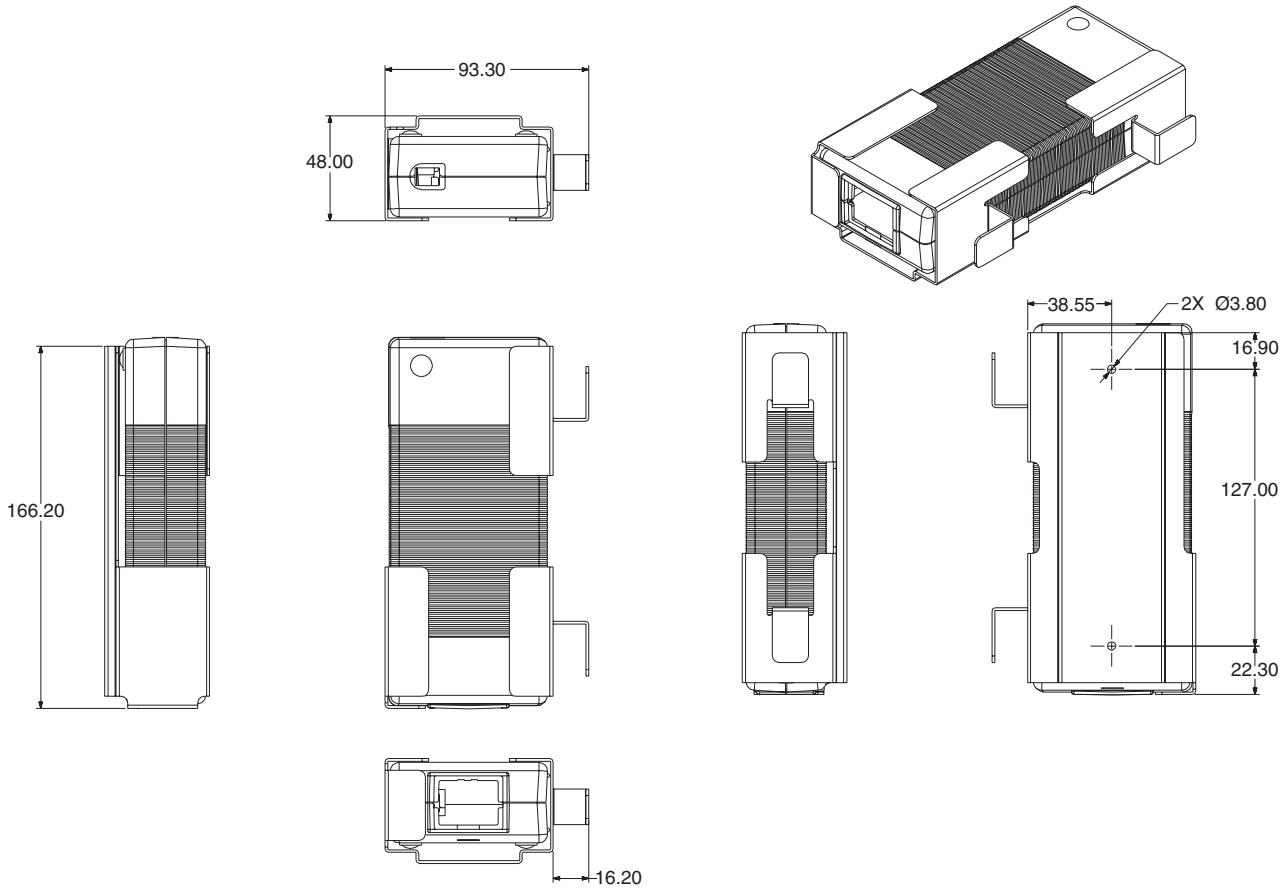

Figure 44. AC power adapter wall-mount bracket

15-inch models

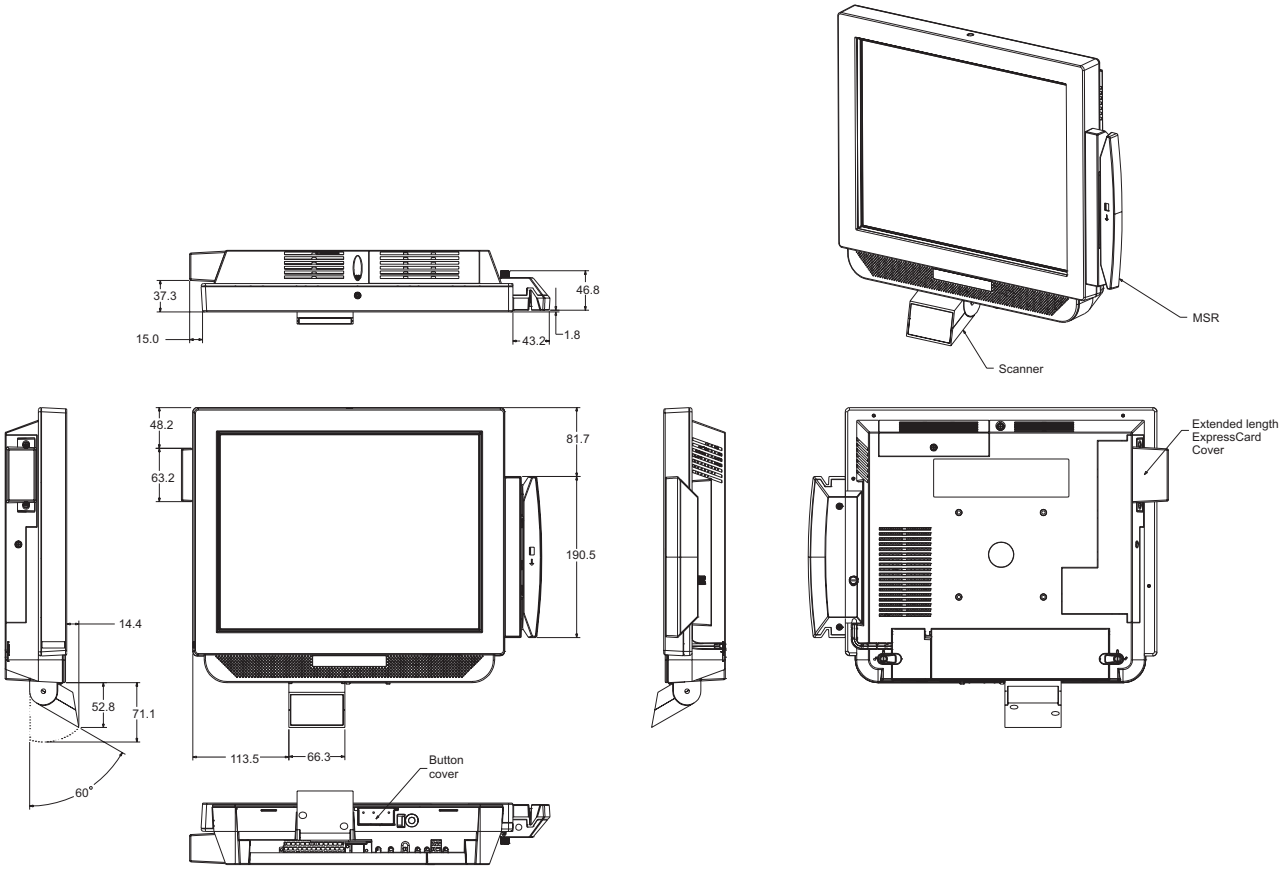

Figure 45. 15-in. system unit with features

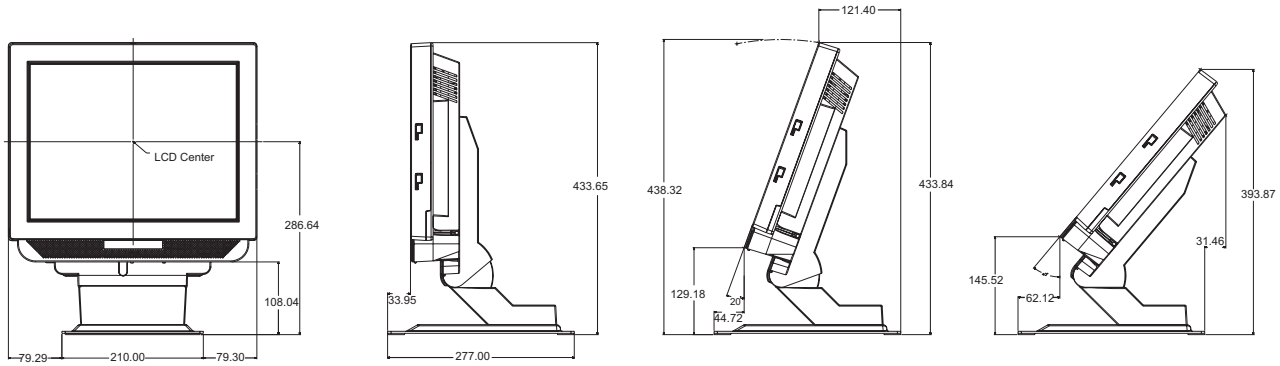

Figure 46. 15-in. system unit with tabletop mount

Product dimensions

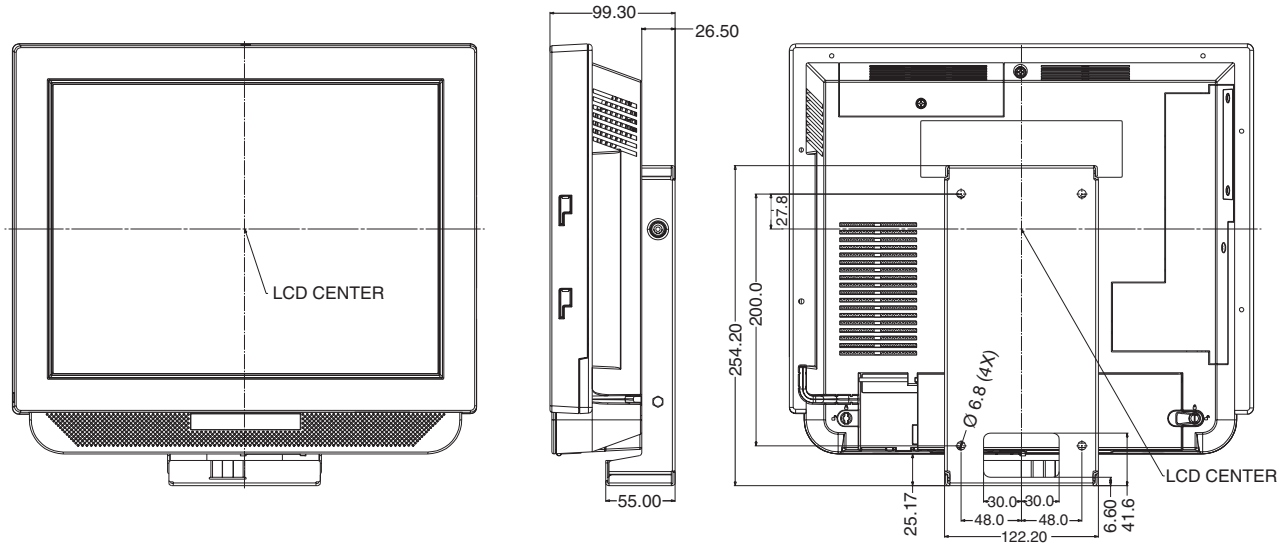

Figure 47. 15-in system unit with wall mount

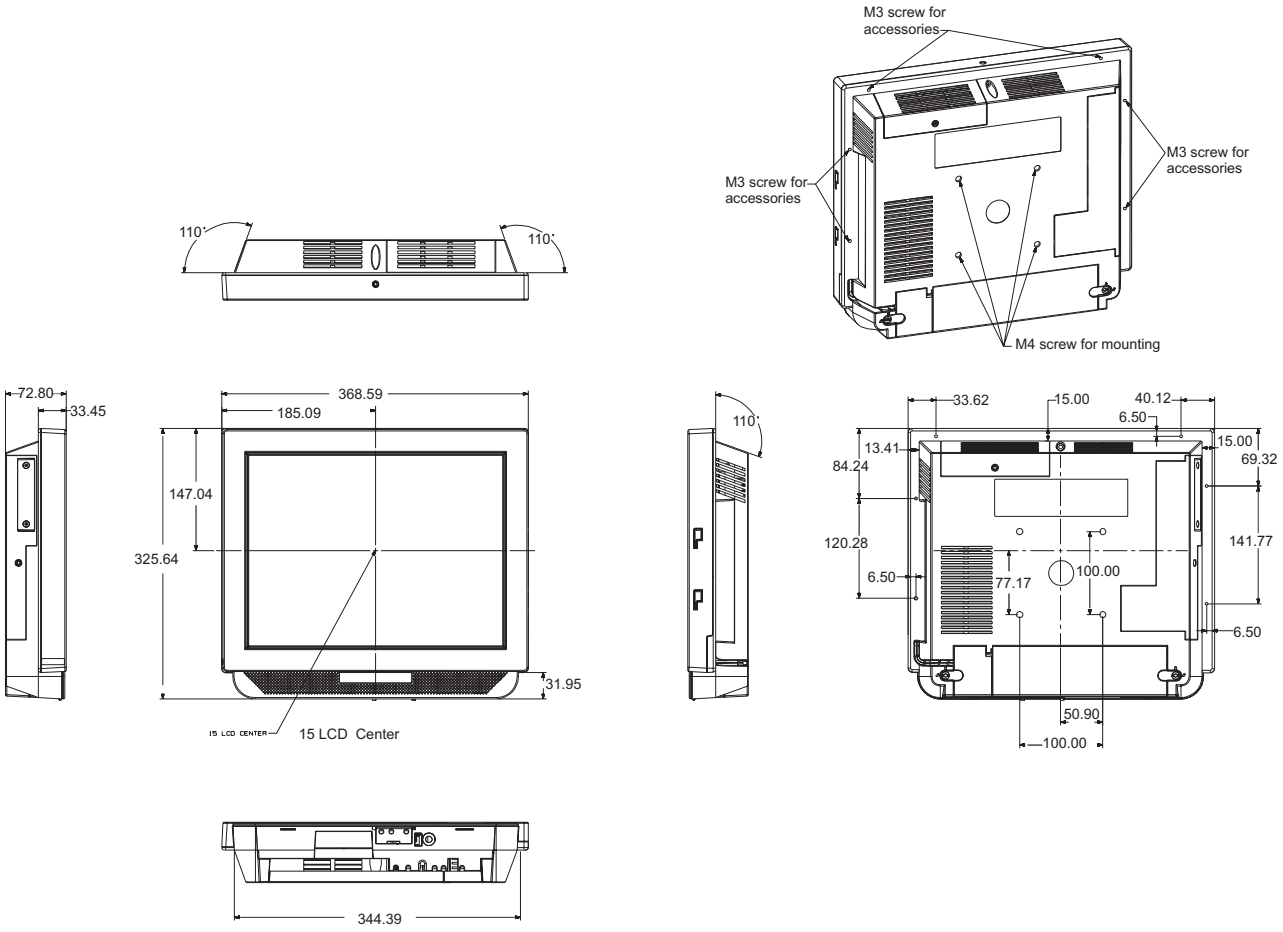

Figure 48. 15-in. system unit without features

17-inch models

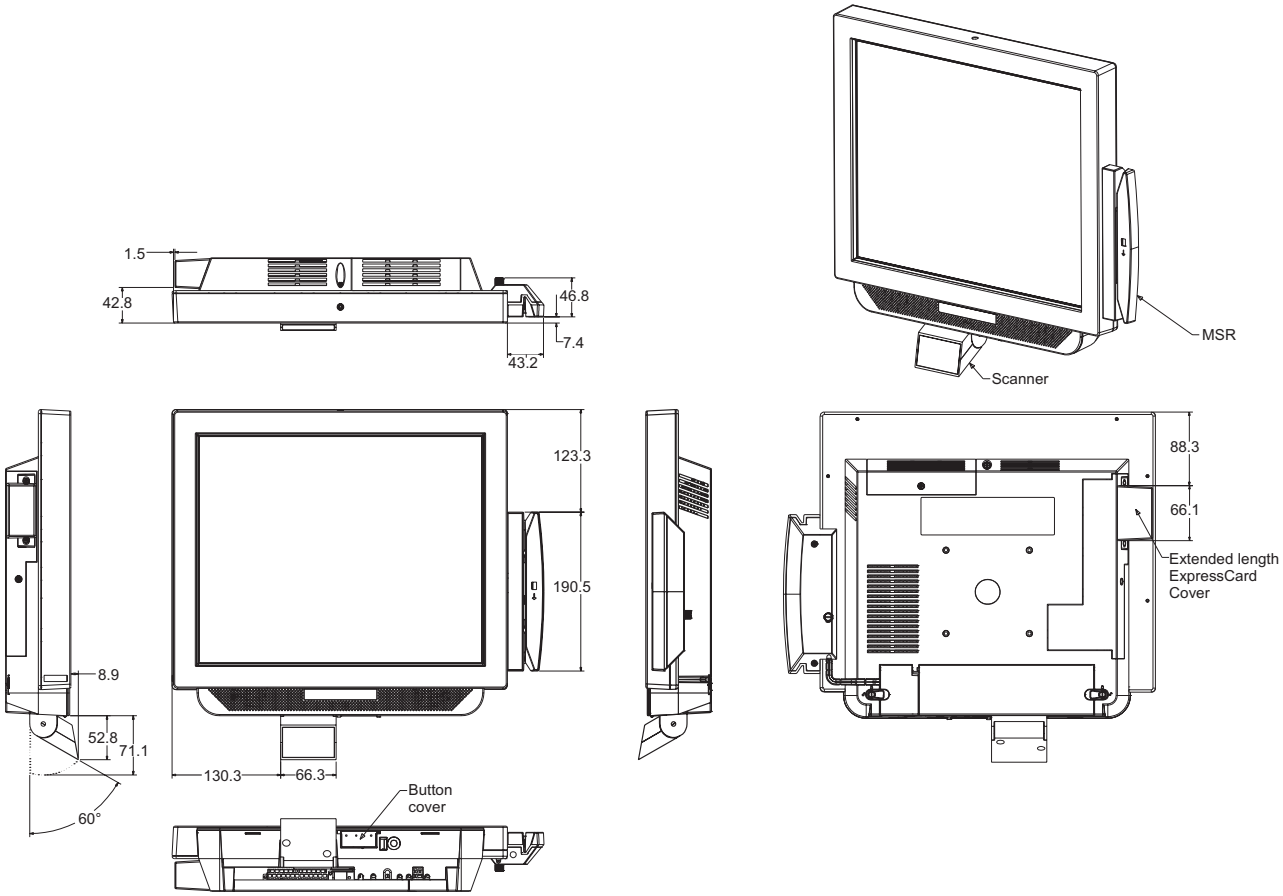

Figure 49. 17-in. system unit without features

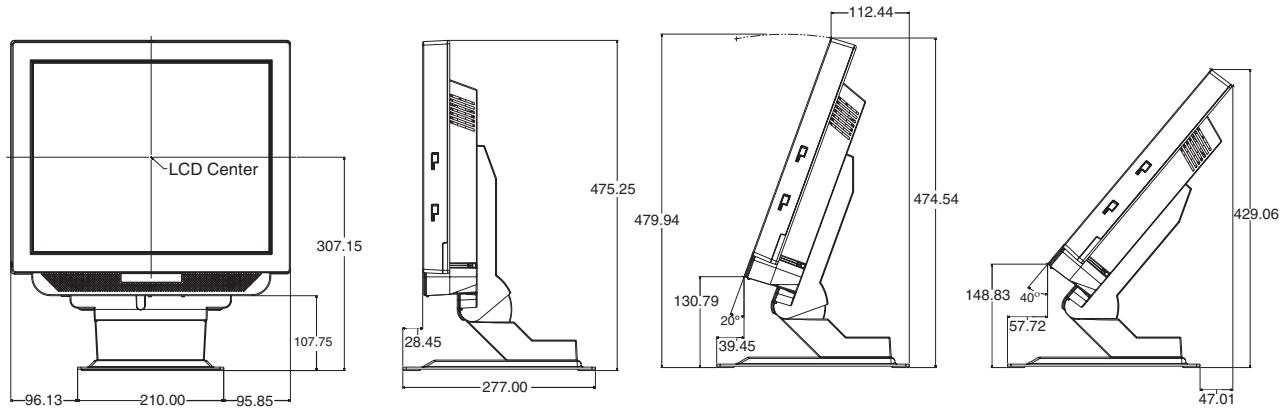

Figure 50. 17-in. system unit with tabletop mount

Product dimensions

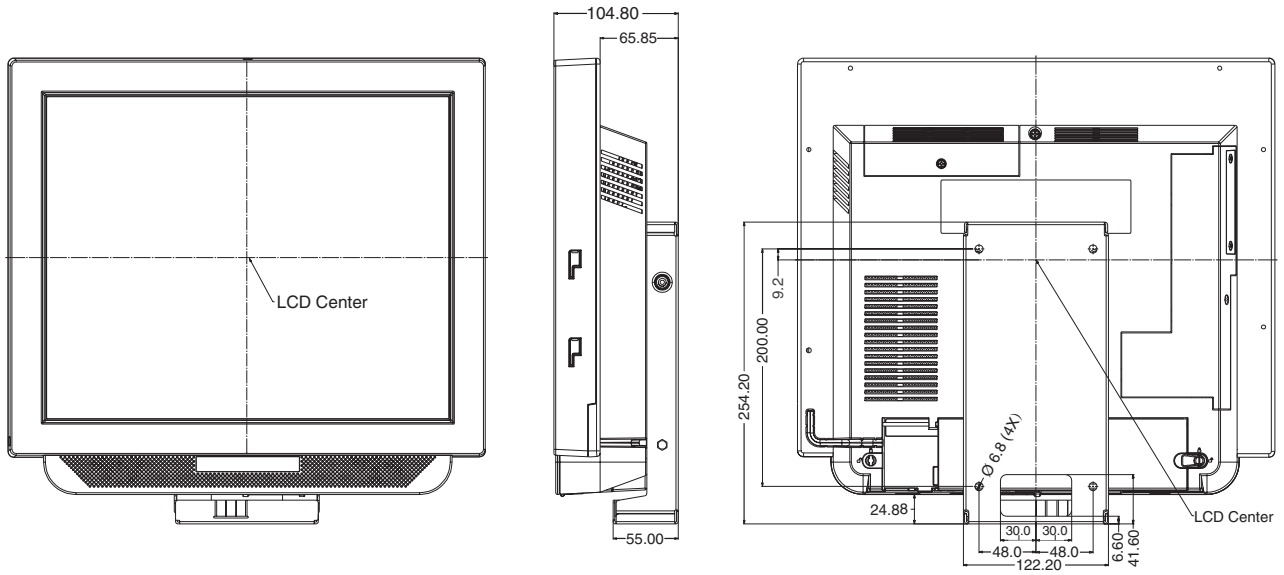

Figure 51. 17-in. system unit with wall mount

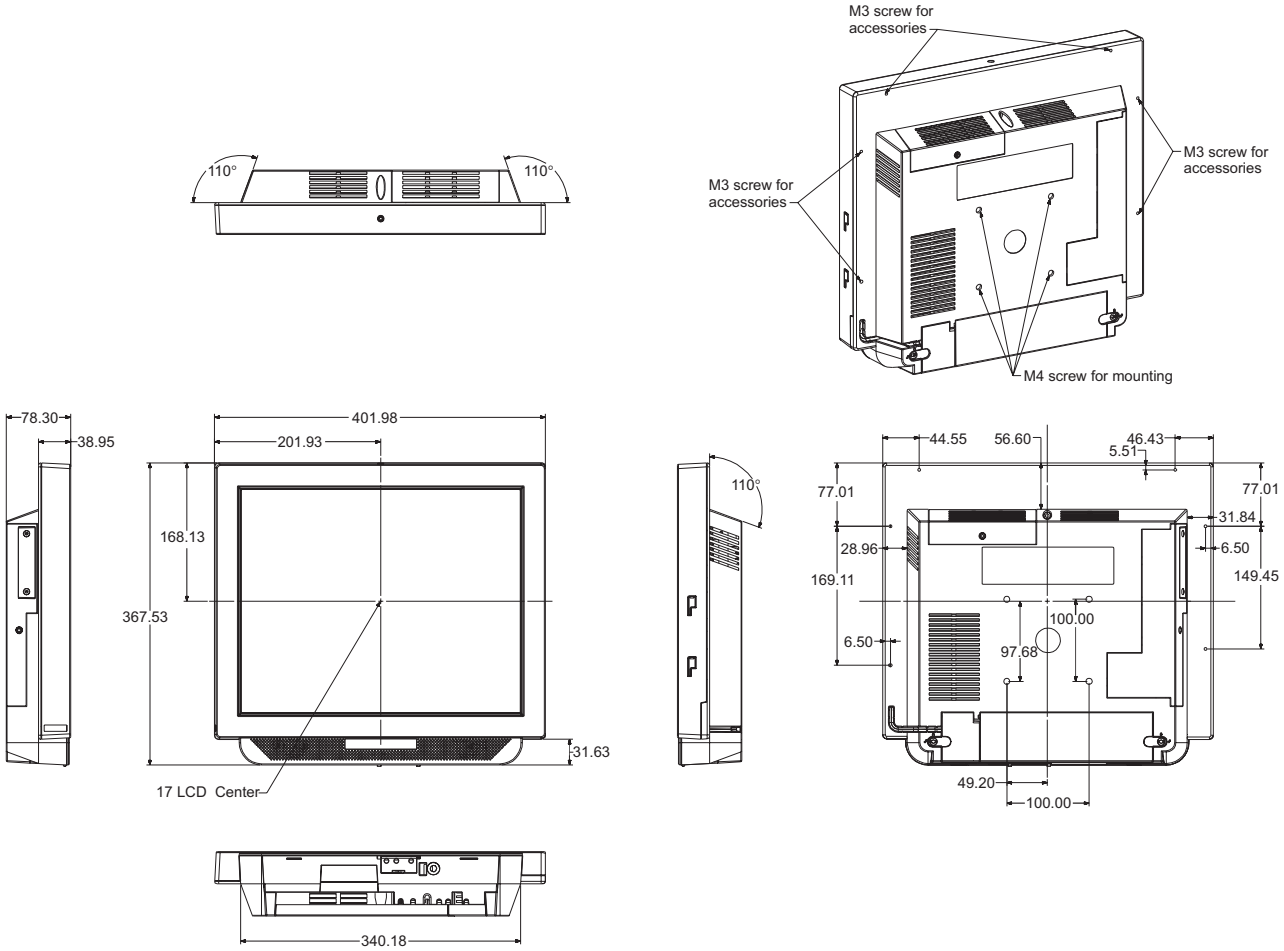

Figure 52. 17 in system unit with features

19-inch models

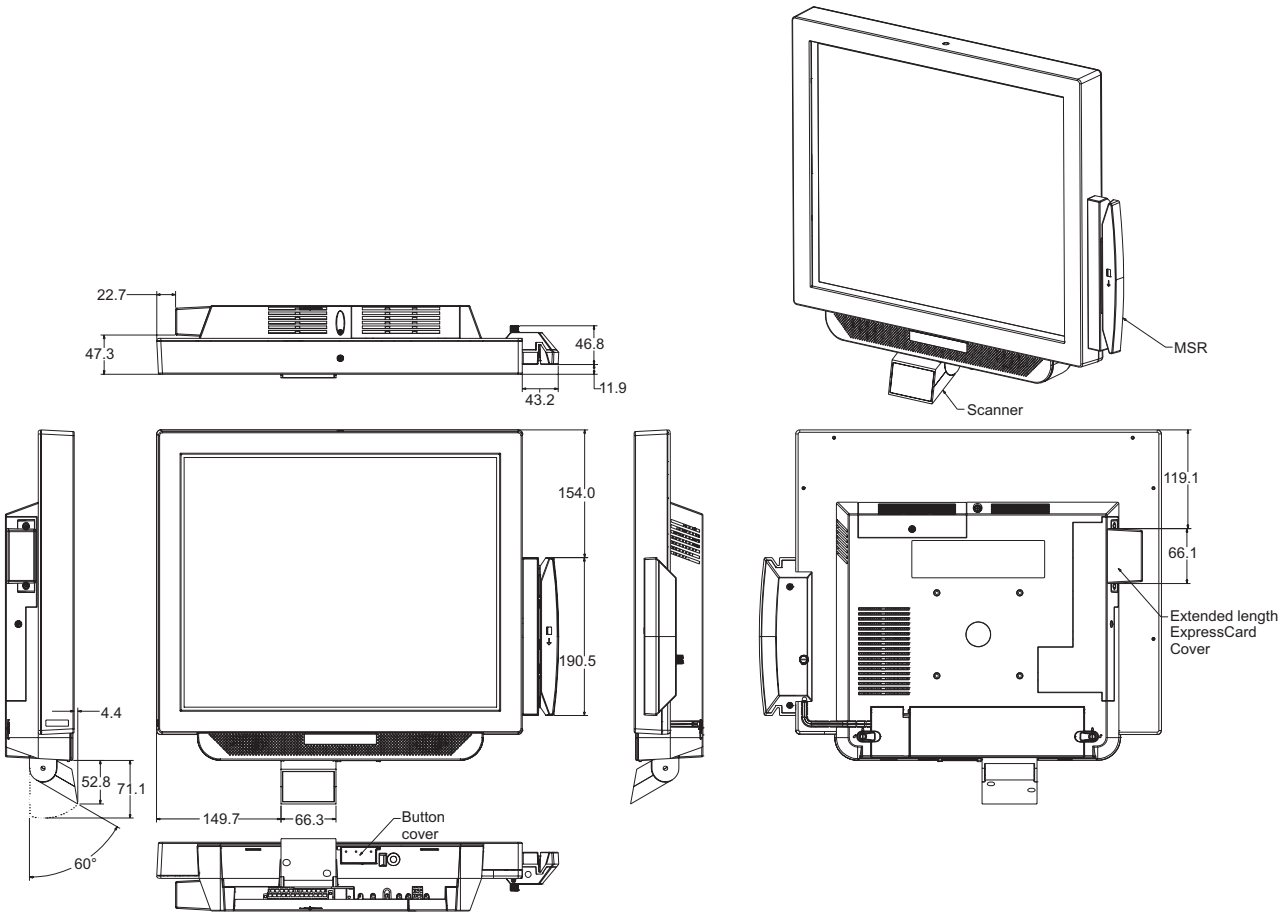

Figure 53. 19 in. system unit with features

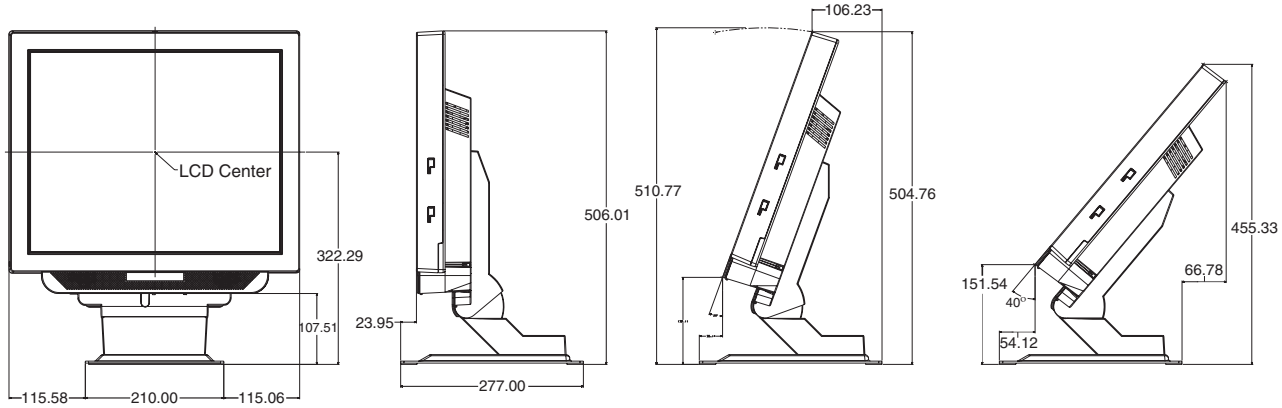

Figure 54. 19 in. system unit with tabletop mount

Product dimensions

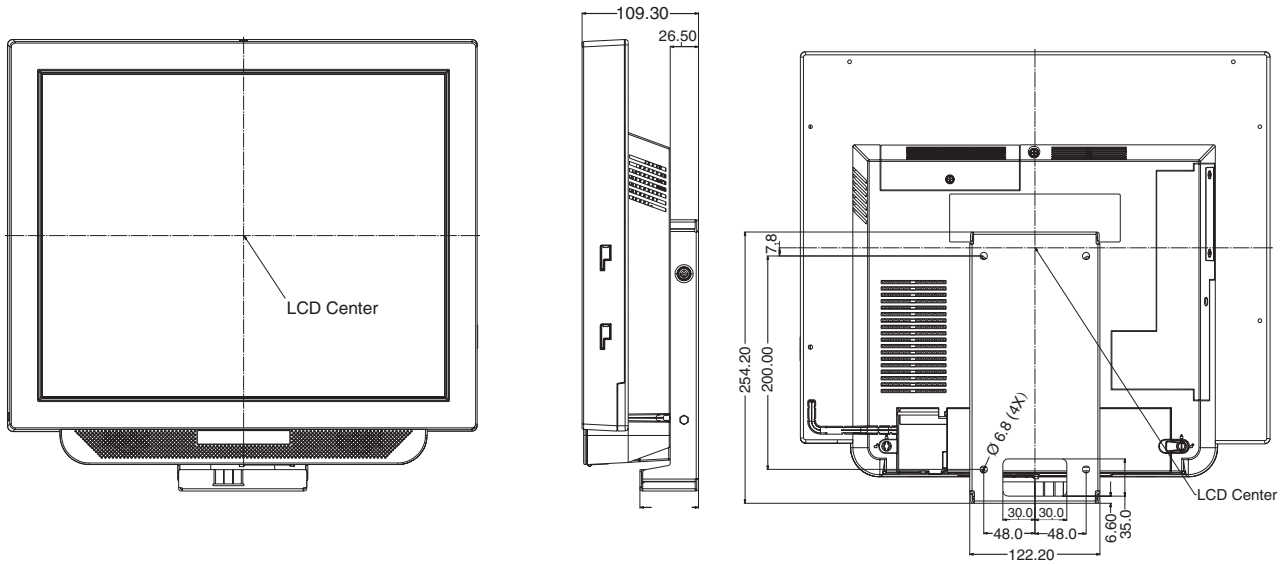

Figure 55. 19 in. system unit with wall mount

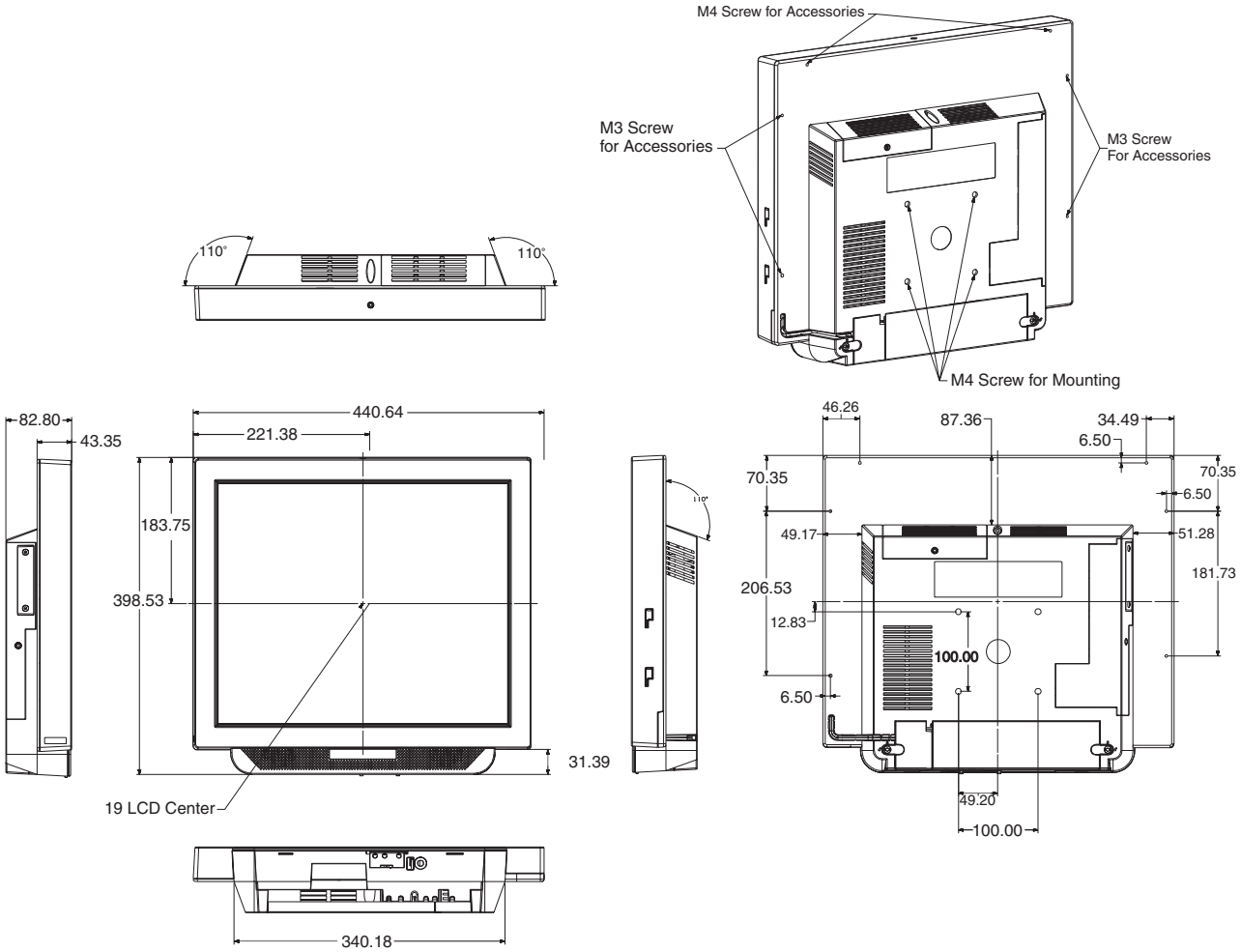

Figure 56. 19 in. system unit without features

Appendix C. Notices

This information was developed for products and services offered in the U.S.A.

IBM may not offer the products, services, or features discussed in this document in other countries. Consult your local IBM representative for information on the products and services currently available in your area. Any reference to an IBM product, program, or service is not intended to state or imply that only that IBM product, program, or service may be used. Any functionally equivalent product, program, or service that does not infringe any IBM intellectual property right may be used instead. However, it is the user's responsibility to evaluate and verify the operation of any non-IBM product, program, or service.

IBM may have patents or pending patent applications covering the subject matter in this document. The furnishing of this document does not give you any license to these patents. You can send license inquiries, in writing, to:

IBM Director of Licensing
IBM Corporation
North Castle Drive
Armonk, NY 10504-1785
U.S.A.

For license inquiries regarding double-byte character set (DBCS) information, contact the IBM Intellectual Property Department in your country or send inquiries, in writing, to:

IBM World Trade Asia Corporation
Licensing
2-31 Roppongi 3-chome, Minato-ku
Tokyo 106, Japan

The following paragraph does not apply to the United Kingdom or any other country where such provisions are inconsistent with local law: INTERNATIONAL BUSINESS MACHINES CORPORATION PROVIDES THIS PUBLICATION "AS IS" WITHOUT WARRANTY OF ANY KIND, EITHER EXPRESS OR IMPLIED, INCLUDING, BUT NOT LIMITED TO, THE IMPLIED WARRANTIES OF NON-INFRINGEMENT, MERCHANTABILITY, OR FITNESS FOR A PARTICULAR PURPOSE. Some states do not allow disclaimer of express or implied warranties in certain transactions, therefore, this statement may not apply to you.

This information could include technical inaccuracies or typographical errors. Changes are periodically made to the information herein; these changes will be incorporated in new editions of the publication. IBM may make improvements and/or changes in the product(s) and/or program(s) described in this publication at any time without notice.

IBM may use or distribute any of the information you supply in any way it believes appropriate without incurring any obligation to you.

Any references in this information to non-IBM Websites are provided for convenience only and do not in any manner serve as an endorsement of those websites. The materials at those websites are not part of the materials for this IBM product and use of those websites is at your own risk.

Information concerning non-IBM products was obtained from the suppliers of those products, their published announcements or other publicly available sources. IBM has not tested those products and cannot confirm the accuracy of performance, compatibility or any other claims related to non-IBM products. Questions on the capabilities of non-IBM products should be addressed to the suppliers of those products.

This information is for planning purposes only. The information herein is subject to change before the products described become available.

Electronic emission notices

Federal Communications Commission statement

This equipment has been tested and found to comply with the limits for a Class A digital device, pursuant to Part 15 of the Federal Communications Commission (FCC) Rules. These limits are designed to provide reasonable protection against harmful interference when the equipment is operated in a commercial environment. This equipment generates, uses, and can radiate radio frequency energy and, if not installed and used in accordance with the instruction manual, may cause harmful interference to radio communications. Operation of this equipment in a residential area is likely to cause harmful interference, in which case the user will be required to correct the interference at his own expense.

Properly shielded and grounded cables and connectors must be used in order to meet FCC emission limits. IBM is not responsible for any radio or television interference caused by using other than recommended cables and connectors or by unauthorized changes or modifications to this equipment. Unauthorized changes or modifications could void the user's authority to operate the equipment.

This device complies with part 15 of the FCC Rules. Operation is subject to the following two conditions:

1. This device may not cause harmful interference, and
2. This device must accept any interference received, including interference that may cause undesired operation.

European Union EMC Directive conformance statement

This product is in conformity with the protection requirements of EU Council Directive 2004/108/EC on the approximation of the laws of the Member States relating to electromagnetic compatibility. IBM cannot accept responsibility for any failure to satisfy the protection requirements resulting from a non-recommended modification of the product, including the fitting of non-IBM option cards.

This product has been tested and found to comply with the limits for Class A Information Technology Equipment according to CISPR 22/European Standard EN 55022. The limits for Class A equipment were derived for commercial and industrial environments to provide reasonable protection against interference with licensed communication equipment.

Attention: This is a Class A product. In a domestic environment this product may cause radio interference in which case the user may be required to take adequate measures.

European Community contact:

IBM Technical Regulations
Pascalstr. 100, Stuttgart, Germany 70569
Telephone: 0049 (0)711 785 1176
Fax: 0049 785 1283
E-mail: tjahn@de.ibm.com

Industry Canada Class A Emission Compliance statement

This Class A digital apparatus complies with Canadian ICES-003.

Avis de conformité aux normes d'Industrie Canada

Cet appareil numérique de la classe A est conforme à la norme NMB-003 du Canada.

Germany

Zulassungsbescheinigung laut dem Deutschen Gesetz über die elektromagnetische Verträglichkeit von Geräten (EMVG) vom 30. August 1995 (bzw. der EMC EG Richlinie 89/336).

Dieses Gerät ist berechtigt in Übereinstimmung mit dem Deutschen EMVG das EG-Konformitätszeichen - CE - zu führen.

Verantwortlich für die Konformitätserklärung nach Paragraph 5 des EMVG ist die

IBM Deutschland Informationssysteme GmbH, 70548 Stuttgart

Informationen in Hinsicht EMVG Paragraph 3 Abs. (2) 2:

Das Gerät erfüllt die Schutzanforderungen nach EN 50082–1 und EN 55022 Klasse A.

EN 55022 Klasse A Geräte müssen mit folgendem Warnhinweis versehen werden:

"Warnung: dies ist eine Einrichtung der Klasse A. Diese Einrichtung kann im Wohnbereich Funkstörungen verursachen; in diesem Fall kann vom Betreiber verlangt werden, angemessene Ma*ß*nahmen durchzuführen und dafür aufzukommen."

EN 50082–1 Hinweis:

"Wird dieses Gerät in einer industriellen Umgebung betrieben (wie in EN 50082–2 festgelegt), dann kann es dabei eventuell gestört werden. In solch einem Fall ist der Abstand bzw. die Abschirmung zu der industriellen Störquelle zu vergrö*ß*ern."

Anmerkung:

Um die Einhaltung des EMVG sicherzustellen sind die Geräte, wie in den IBM Handbüchern angegeben, zu installieren und zu betreiben.

Australia and New Zealand

Attention: This is a Class A product. In a domestic environment this product may cause radio interference, in which case the user may be required to take adequate measures.

Chinese Class A warning statement

Attention: This is a Class A product. In a domestic environment this product may cause radio interference, in which case the user may be required to take adequate measures.

中华人民共和国“A 类”警告声明

声 明

此为 A 级产品，在生活环境中，该产品可能会造成无线电干扰。在这种情况下，可能需要用户对其干扰采取切实可行的措施。

Japanese Electrical Appliance and Material Safety Law statement

本製品およびオプションに電源コードセットが付属する場合は、それぞれその装置専用のものになっていますので他の機器には使用しないで下さい。

Japanese power line harmonics compliance statement

高調波ガイドライン適合品

高調波ガイドライン適合品

Japanese VCCI Council Class A statement

Attention: This is a Class A product based on the standard of the VCCI Council. If this equipment is used in a domestic environment, radio interference may occur, in which case, the user may be required to take corrective actions.

Japan Electronics and Information Technology Industries Association (JEITA) statement

高調波ガイドライン適合品

Japanese Electronics and Information Technology Industries Association (JEITA) Confirmed Harmonics Guideline (products less than or equal to 20 A per phase).

Korean communications statement

Please note that this device has been approved for business purposes with regard to electromagnetic interference. If you find this is not suitable for your use, you may exchange it for a non-business purpose one.

A급 기기(업무용)

이 기기는 업무용으로 전자파적합등록을 받은 기기이오니 판매자 또는 이용자는 이점을 주의하시기 바라며, 만약 구입하였을 때에는 구입한 곳에서 가정용으로 교환하시기 바랍니다.

Taiwanese Class A warning statement

警告使用者:
這是甲類的資訊產品，在
居住的環境中使用時，可
能會造成射頻干擾，在這
種情況下，使用者會被要
求採取某些適當的對策•

Taiwan contact information

台灣IBM 產品服務聯絡方式：
台灣國際商業機器股份有限公司
台北市松仁路7號3樓
電話：0800-016-888

IBM Taiwan Product Service Contact Info:
IBM Taiwan Corporation
3F, No 7, Song Ren Road, Taipei Taiwan
Telephone: 0800-016-888

Cable ferrite requirement

All cable ferrites are required to suppress radiated EMI emissions and must not be removed.

Electrostatic discharge

Attention: Electrostatic discharge (ESD) damage can occur when there is a difference in charge between the part, the product, and the service person. No damage will occur if the service person and the part being installed are at the same charge level.

ESD damage prevention

Anytime a service action involves physical contact with logic cards, modules, back-panel pins, or other ESD sensitive (ESDS) parts, the service person must be connected to an ESD common ground point on the product through the ESD wrist strap and cord.

The ESD ground clip can be attached to any frame ground, ground braid, green wire ground, or the round ground prong on the AC power plug. Coax or connector outside shells can also be used.

Handling removed cards

Logic cards removed from a product should be placed in ESD protective containers. No other object should be allowed inside the ESD container with the logic card. Attach tags or reports that must accompany the card to the outside of the container.

Product recycling and disposal

This unit must be recycled or discarded according to applicable local and national regulations. IBM encourages owners of information technology (IT) equipment to responsibly recycle their equipment when it is no longer needed. IBM offers a variety of product return programs and services in several countries to assist equipment owners in recycling their IT products. Information on IBM product recycling offerings can be found on the IBM Website at www.ibm.com/ibm/environment/products/recycling.shtml.

Español:
Esta unidad debe reciclarse o desecharse de acuerdo con lo establecido en la normativa nacional o local aplicable. IBM recomienda a los propietarios de equipos de tecnología de la información (TI) que reciclen responsablemente sus equipos cuando éstos ya no les sean útiles. IBM dispone de una serie de programas y servicios de devolución de productos en varios países, a fín de ayudar a los propietarios de equipos a reciclar sus productos de TI. Se puede encontrar información sobre las ofertas de reciclado de productos de IBM en el sitio web de IBM www.ibm.com/ibm/environment/products/recycling.shtml.l.

Notice: This mark applies only to countries within the European Union (EU) and Norway.

Appliances are labeled in accordance with European Directive 2002/96/EC concerning waste electrical and electronic equipment (WEEE). The Directive determines the framework for the return and recycling of used appliances as applicable throughout the European Union. This label is applied to various products to indicate that the product is not to be thrown away, but rather reclaimed upon end of life per this Directive.

Remarque : Cette marque s'applique uniquement aux pays de l'Union Européenne et à la Norvège. L'etiquette du système respecte la Directive européenne 2002/96/EC en matière de Déchets des Equipements Electriques et Electroniques (DEEE), qui détermine les dispositions de retour et de recyclage applicables aux systèmes utilisés à travers l'Union européenne. Conformément à la directive, ladite étiquette précise que le produit sur lequel elle est apposée ne doit pas être jeté mais être récupéré en fin de vie.

注意：このマークは EU 諸国およびノルウェーにおいてのみ適用されます。

この機器には、EU 諸国に対する廃電気電子機器指令 2002/96/EC(WEEE) のラベルが貼られています。この指令は、EU 諸国に適用する使用済み機器の回収とリサイクルの骨子を定めています。このラベルは、使用済みになった時に指令に従って適正な処理をする必要があることを知らせるために種々の製品に貼られています。

In accordance with the European WEEE Directive, electrical and electronic equipment (EEE) is to be collected separately and to be reused, recycled, or recovered at end of life. Users of EEE with the WEEE marking per Annex IV of the WEEE Directive, as shown above, must not dispose of end of life EEE as unsorted municipal waste, but use the collection framework available to customers for the return, recycling, and recovery of WEEE. Customer participation is important to minimize any potential effects of EEE on the environment and human health due to the potential presence of hazardous substances in EEE. For proper collection and treatment, contact your local IBM representative.

Disposal of IT products should be in accordance with local ordinances and regulations.

Battery return program

This product may contain sealed lead acid, nickel cadmium, nickel metal hydride, lithium, or lithium ion battery. Consult your user manual or service manual for specific battery information. The battery must be recycled or disposed of properly. Recycling facilities may not be available in your area. For information on disposal of batteries outside the United States, go to www.ibm.com/ibm/environment/products/battery.shtml or contact your local waste disposal facility.

In the United States, IBM has established a return process for reuse, recycling, or proper disposal of used IBM sealed lead acid, nickel cadmium, nickel metal hydride, and other battery packs from IBM equipment. For information on proper disposal of these batteries, contact IBM at 1-800-426-4333. Please have the IBM part number listed on the battery available prior to your call.

For Taiwan:

Please recycle batteries.

For the European Union:

Notice: This mark applies only to countries within the European Union (EU)

Batteries or packaging for batteries are labeled in accordance with European Directive 2006/66/EC concerning batteries and accumulators and waste batteries and accumulators. The Directive determines the framework for the return and recycling of used batteries and accumulators as applicable throughout the European Union. This label is applied to various batteries to indicate that the battery is not to be thrown away, but rather reclaimed upon end of life per this Directive.

Les batteries ou emballages pour batteries sont étiquetés conformément aux directives européennes 2006/66/EC, norme relative aux batteries et accumulateurs en usage et aux batteries et accumulateurs usés. Les directives déterminent la marche à suivre en vigueur dans l'Union Européenne pour le retour et le recyclage des batteries et accumulateurs usés. Cette étiquette est appliquée sur diverses batteries pour indiquer que la batterie ne doit pas être mise au rebut mais plutôt récupérée en fin de cycle de vie selon cette norme.

バッテリーあるいはバッテリー用のパッケージには、EU 諸国に対する廃電気電子機器指令 2006/66/EC のラベルが貼られています。この指令は、バッテリーと蓄電池、および廃棄バッテリーと蓄電池に関するものです。この指令は、使用済みバッテリーと蓄電池の回収とリサイクルの骨子を定めているもので、EU 諸国にわたって適用されます。このラベルは、使用済みになったときに指令に従って適正な処理をする必要があることを知らせるために種々のバッテリーに貼られています。

In accordance with the European Directive 2006/66/EC, batteries and accumulators are labeled to indicate that they are to be collected separately and recycled at end of life. The label on the battery may also include a chemical symbol for the metal concerned in the battery (Pb for lead, Hg for mercury and Cd for cadmium). Users of batteries and accumulators must not dispose of batteries and accumulators as unsorted municipal waste, but use the collection framework available to customers for the return, recycling and treatment of batteries and accumulators. Customer participation is important to minimize any potential effects of batteries and accumulators on the environment and human health due to the potential presence of hazardous substances. For proper collection and treatment, contact your local IBM representative.

This notice is provided in accordance with Royal Decree 106/2008 of Spain: The retail price of batteries, accumulators and power cells includes the cost of the environmental management of their waste.

For California:

Perchlorate material – special handling may apply

Refer to www.dtsc.ca.gov/hazardouswaste/perchlorate.

The foregoing notice is provided in accordance with *California Code of Regulations Title 22, Division 4.5, Chapter 33: Best Management Practices for Perchlorate Materials*. This product/part includes a lithium manganese dioxide battery which contains a perchlorate substance.

Flat panel displays

The fluorescent lamp in the liquid crystal display contains mercury. Dispose of it as required by local ordinances and regulations.

Monitors and workstations

Connecticut: Visit the website of the Department of Environmental Protection at www.ct.gov/depfor information about recycling covered electronic devices in the State of Connecticut, or telephone the Connecticut Department of Environmental Protection at 1-860-424-3000.

Oregon: For information regarding recycling covered electronic devices in the state of Oregon, go to the Oregon Department of Environmental Quality site at www.deq.state.or.us/lq/electronics.htm.

Washington: For information about recycling covered electronic devices in the State of Washington, go to the Department of Ecology Website at https://fortress.wa.gov/ecy/recycle/ or telephone the Washington Department of Ecology at 1-800Recycle.

Trademarks

The following are trademarks of International Business Machines Corporation in the United States or other countries, or both:

AnyPlace Kiosk(tm)
AnyPlace POS Hub(tm)
DB2
DB2 Universal Database
IBM and the IBM logo
PS/2
SureMark
SurePoint
SurePOS
Wake on LAN
WebSphere

Microsoft, Windows, Windows NT, and the Windows logo are trademarks of Microsoft Corporation in the United States, other countries, or both.

Celeron and Intel are trademarks of Intel corporation in the United States, or other countries.

Java and all Java-based trademarks and logos are trademarks or registered trademarks of Oracle and/or its affiliates.

Other company, product, or service names may be trademarks or service marks of others.

Appendix D. Safety information

Danger

Before you begin to install this product, read the safety information in *IBM Safety Information – Read This First*, GA27-4004. This booklet describes safe procedures for cabling and plugging in electrical equipment.

Gevaar

Voordat u begint met de installatie van dit produkt, moet u eerst de veiligheidsinstructies lezen in de brochure *Veiligheidsinstructies – Lees dit eerst*, GA27-4004. Hierin wordt beschreven hoe u electrische apparatuur op een veilige manier moet bekabelen en aansluiten.

Perigo

Antes de começar a instalar este produto, leia as informações de segurança contidas em *Informações Sobre Seguranaça – Leia Isto Primeiro*, GA27-4004. Esse folheto descreve procedimentos de segurança para a instalação de cabos e conexões em equipamentos elétricos.

Fare!

Før du installerer dette produkt, skal du læse sikkerhedsforskrifterne i *Sikkerhedsforskrifter – Læs dette først*, GA27-4004. Vejledningen beskriver den fremgangsmåde, du skal bruge ved tilslutning af kabler og udstyr.

Gevaar

Voordat u begint met het installeren van dit produkt, dient u eerst de veiligheidsrichtlijnen te lezen die zijn vermeld in de publikatie *IBM Safety Information – Read This First*, GA27-4004. In dit boekje vindt u veilige procedures voor het aansluiten van elektrische appratuur.

VAARA

Ennen kuin aloitat tämän tuotteen asennuksen, lue julkaisussa *Turvaohjeet – Luetämä ensin*, GA27-4004, olevat turvaohjeet. Tässä kirjasessa on ohjeet siitä, miten sähkölaitteet kaapeloidaan ja kytketään turvallisesti.

Danger

Avant d'installer le présent produit, consultez le livret *Informations pour la sécurité – Lisez-moi d'abord*, GA27-4004, qui décrit les procédures à respecter pour effectuer les opérations de câblage et brancher les équipements électriques en toute sécurité.

Vorsicht

Bevor mit der Installation des Produktes begonnen wird, die Sicherheitshinweise in *Sicherheitsinformationen – Bitte zuerst lesen*, GA27-4004. Diese Veröffentlichung beschreibt die Sicherheitsvorkehrungen für das Verkabeln und Anschließen elektrischer Geräte.

Vigyázat

Mielôtt megkezdi a berendezés üzembe helyezését, olvassa el a *IBM Safety Information – Read This First*, GA27-4004, könyvecskében leírt biztonsági információkat. Ez a könyv leírja, milyen biztonsági intézkedéseket kell megtenni az elektromos berendezés huzalozásakor illetve csatlakoztatásakor.

Pericolo

Prima di iniziare l'installazione di questo prodotto, leggere le informazioni relative alla sicurezza riportate nell'opuscolo *Informazioni di sicurezza – Prime informazioni da leggere*, GA27-4004, in cui sono descritte le procedure per il cablaggio ed il collegamento di apparecchiature elettriche.

Fare

Før du begynner å installere dette produktet, må du lese sikkerhetsinformasjonen i *Sikkerhetsinformasjon – Les dette først*, GA27-4004, som beskriver sikkerhetsrutinene for kabling og tilkobling av elektrisk utstyr.

Perigo

Antes de iniciar a instalação deste produto, leia as informações de segurança *Informações de Segurança – Leia Primeiro*, GA27-4004. Este documento descreve como efectuar, de um modo seguro, as ligações eléctricas dos equipamentos.

Peligro

Antes de empezar a instalar este producto, lea la información de seguridad en *Información de Seguridad – Lea Esto Primero*, GA27-4004. Este documento describe los procedimientos de sequridad para cablear y enchufar equipos eléctricos.

Varning – livsfara

Innan du börjar installera den här produkten bör du läsa säkerhetsinformationen i dikumentet *Säkerhetsföreskrifter – Läs detta först*, GA27-4004. Där beskrivs hur du på ett säkert sätt ansluter elektrisk utrustning.

危險：安裝本產品之前， 請先閱讀
"IBM Safety Information--Read
This First" GA27-4004 手冊中所提
供的安全注意事項。 這本手冊將會說明
使用電器設備的纜線及電源的安全程序。

Opasnost: Prije nego sto počnete sa instalacijom produkta,
pročitajte naputak o pravilima o sigurnom rukovanju u
Upozorenje: Pravila o sigurnom rukovanju - Prvo pročitaj ovo,
GA27-4004. Ovaj privitak opisuje sigurnosne postupke za
priključrivanje kabela i priključivanje na električno napajanje.

Upozornění: než zahájíte instalaci tohoto produktu, přečtěte si
nejprve bezpečnostní informace v pokynech „ Bezpečnostní
informace“ č. GA27-4004. Tato brožurka popisuje bezpečnostní
opatření pro kabeláž a zapojení elektrického zařízení.

Κίνδυνος: Πριν ξεκινήσετε την εγκατάσταση αυτού του προϊόντος,
διαβάστε τις πληροφορίες ασφάλειας στο φυλλάδιο *IBM Safety
Information-Read this first,* GA27-4004. Στο φυλλάδιο αυτό
περιγράφονται οι ασφαλείς διαδικασίες για την καλωδίωση των
ηλεκτρικών συσκευών και τη σύνδεσή τους στην πρίζα.

危険： 導入作業を開始する前に、安全に関する
小冊子 GA27-4004 の「最初にお読みください」
(Read This First)の項をお読みください。
この小冊子は、電気機器の安全な配線と接続の
手順について説明しています。

위험: 이 제품을 설치하기 전에 반드시
"주의: 안전 정보-시작하기 전에"
(GA27-4004) 에 있는 안전 정보를
읽으십시오.

סכנה: לפני שמתחילים בהתקנת מוצר זה, יש לקרוא את הוראות הבטיחות בחוברת
Caution: Safety Information - Read This First, GA27-4004
חוברת זו מתארת את הוראות הבטיחות לחיבור הכבלים ולחיבור לחשמל של ציוד חשמלי.

خطـــر: قبـــل عمـــلية بـــدء تركيـــب هذا المنتـــج، قم بقراءة معلومـــات
الحمـــاية الموجودة في التحذيـــر: معلومـــات الحمـــاية – Read This First،
GA27-4004 . يقـــوم هذا الكتيـــب بوصـــف اجـــراءات الآمـــان
لتوصـــيل الأدوات الكـــهربائية بالكـــابلات والمقبـــس الكـــهربائـــي.

ОПАСНОСТ
Пред да почнете да го инсталирате овој продукт, прочитајте ја информацијата за безбедност:
"Предупредување: Информација за безбедност: Прочитајте го прво ова", GA27-4004.
Оваа брошура опишува безбедносни процедури за каблирање и вклучување на електрична опрема.

Uwaga:
Przed rozpoczęciem instalacji produktu należy zapoznać się z instrukcją:
"IBM Safety Information - Read This First", GA27-4004.
Zawiera ona warunki bezpieczeństwa przy podłączaniu do sieci elektrycznej i eksploatacji.

ОСТОРОЖНО: Прежде чем инсталлировать этот продукт, прочтите Инструкцию по технике безопасности в документе "Внимание: Инструкция по технике безопасности -- Прочесть в первую очередь", GA27-4004. В этой брошюре описаны безопасные способы каблирования и подключения электрического оборудования.

Nebezpečenstvo: Pred inštaláciou výrobku si prečítajte bezpečnosté predpisy v
Výstraha: Bezpeč osté predpisy - Prečítaj ako prvé, GA27-4004. V tejto brožúrke sú opísané bezpečnosté postupy pre pripojenie elektrických zariadení.

Pozor: Preden zaènete z instalacijo tega produkta preberite poglavje: 'Opozorilo: Informacije o varnem rokovanju-preberi pred uporabo," GA27-4004. To poglavje opisuje pravilne postopke za kabliranje,

危險：

開始安裝此產品之前，請先閱讀安全資訊。

注意：

請先閱讀 - 安全資訊 GA27-4004

此冊子說明插接電器設備之電纜線的安全程序。

危险：
在开始安装本产品之前，请阅读
IBM Safety Information - Read This First，
GA27-4004 中的安全信息。
此手册描述了如何安全地连接和插拔电气设备。

Appendix E. Kiosk notices

AnyPlace Kiosk Class 2 laser notices

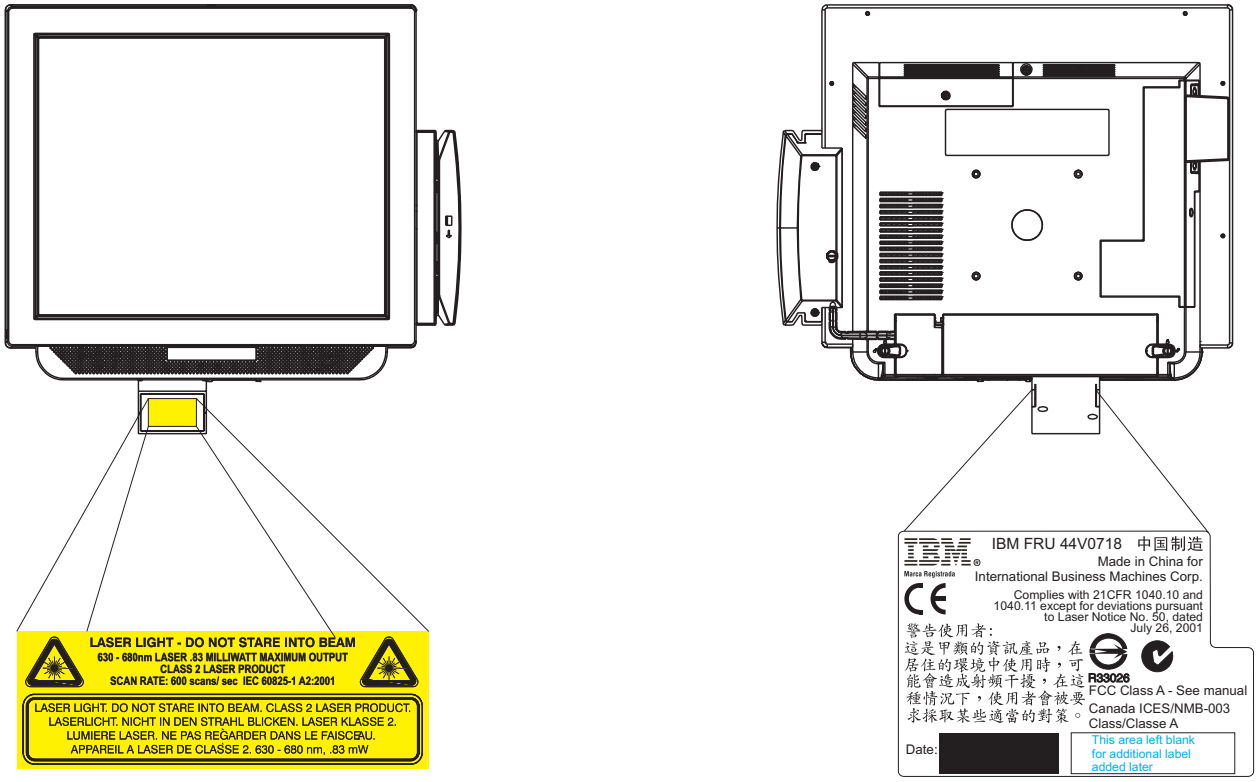

Figure 57. AnyPlace Kiosk Class 2 laser notices

Class 2 laser notices

CAUTION:
This product contains a class 2 laser. Do not stare into the beam.

تنبيــه:
يحتوي هذا المنتج على ليزر Class 2. لا تقوم بتركيز النظر في الشعاع. (C029)

CUIDADO:
Este produto contém um laser Classe 2. Não olhe em direção ao raio. (C029)

注意:
本產品包含 Class 2 雷射產品。請勿注視光束。(C029)

Pozor:
Ovaj proizvod sadrži laser Klase 2. Ne gledajte u zraku. (C029)

POZOR:
Tento produkt obsahuje laser třídy 2. Nedívejte se do paprsku. (C029)

Pas på:
Produktet indeholder et klasse 2-laserprodukt. Se ikke ind i laserstrålen. (C029)

Let op!
Dit product bevat een laser van Klasse 2. Kijk niet in de laserstraal. (C029)

Varoitus:
Tämä tuote sisältää luokan 2 laserlähteen. Varo katsomasta säteeseen. (C029)

ATTENTION :
Ce produit contient un laser de classe 2. Evitez de regarder fixement le faisceau. (C029)

Achtung:
Dieses Produkt enthält einen Laser der Klasse 2. Niemals direkt in den Laser-strahl blicken. (C029)

ΠΡΟΣΟΧΗ:
Το προϊόν αυτό περιέχει υπομονάδα laser Κατηγορίας 2. Μην κοιτάτε στην κατεύθυνση της δέσμης laser. (C029)

זהירות:
מוצר זה מכיל לייזר מקטגוריה Class 2. אין להסתכל ישירות לתוך הקרן. (C029)

FIGYELMEZTETÉS:
Ez a termék 2-es osztályú lézert tartalmaz. Ne nézzen bele a lézernyalábba. (C029)

Avvertenza:
Questo prodotto contiene un laser di Classe 2. Non fissare il fascio laser. (C029)

注意:
当製品には、クラス 2 のレーザーが使用されています。光線をのぞき込まないでください。(C029)

주의:
이 제품에는 등급 2 레이저가 포함되어 있습니다. 광선을 응시하지 마십시오. (C029)

ПРЕДУПРЕДУВАЊЕ:
Овој производ содржи ласер од Класа 2. Да не се гледа директно во снопот. (C029)

ADVARSEL:
Dette produktet inneholder en laser i klasse 2. Ikke stirr inn i laserstrålen. (C029)

UWAGA:
Produkt ten zawiera laser klasy 2. Nie należy patrzeć na promień lasera. (C029)

CUIDADO:
Este produto contém um laser Classe 2. Não observe directamente o feixe. (C029)

ОСТОРОЖНО:
Данное устройство содержит лазер класса 2. Не смотрите прямо на луч. (C029)

POZOR:
Tento produkt obsahuje laser triedy 2. Nepozerajte sa do lúča. (C029)

POZOR:
Ta izdelek vsebuje laser razreda 2. Ne glejte v žarek. (C029)

PRECAUCIÓN:
Este producto contiene un láser de clase 2. No mire directamente al rayo láser. (C029)

Varning – risk för personskada:
Maskinvaran innehåller en laserprodukt av klass 2. Titta inte in i ljusstrålen. (C029)

Regulatory notice for AR5BXB72 IBM 802.11n wireless LAN mini PCI-Express adapter

The IBM Wireless LAN Mini PCI-Express Adapter must be installed and used in strict accordance with the following instructions. This product complies with the following radio frequency standards. In the 5150 MHz to 5250 MHz frequency range, this transmitter is restricted to indoor use only.

This device complies with Part 15 of the FCC Rules. Operation is subject to the following two conditions: (1) this device may not cause harmful interference, and (2) this device must accept any interference received, including interference that may cause undesired operation. This wireless adapter does not contain any user serviceable components. Any unauthorized product changes or modifications will invalidate warranty and all applicable regulatory certifications and approvals.

USA – Federal Communications Commission (FCC)

This device complies with Part 15 of the FCC Rules. Operation is subject to the following two conditions: (1) this device may not cause harmful interference, and (2) this device must accept any interference received, including interference that may cause undesired operation.

Exposure to radio frequency energy

The radiated output power of the Wireless LAN Mini-PCI Card authorized for use in the IBM 4838 Anyplace Kiosk is far below the FCC radio frequency exposure limits. Nevertheless, the IBM 4838 Anyplace Kiosk shall be used in such a manner that the potential for human contact during normal operations is minimized.

CAUTION:

- **To comply with FCC RF exposure compliance requirements, a separation distance of at least 20 cm (8 inches) must be maintained between the antenna for the integrated Wireless LAN Mini-PCI Card built in to the display section and all persons.**
- **The antenna(s) must not be co-located (within 20cm) or operating in conjunction with any other antenna or transmitter during customer usage.**

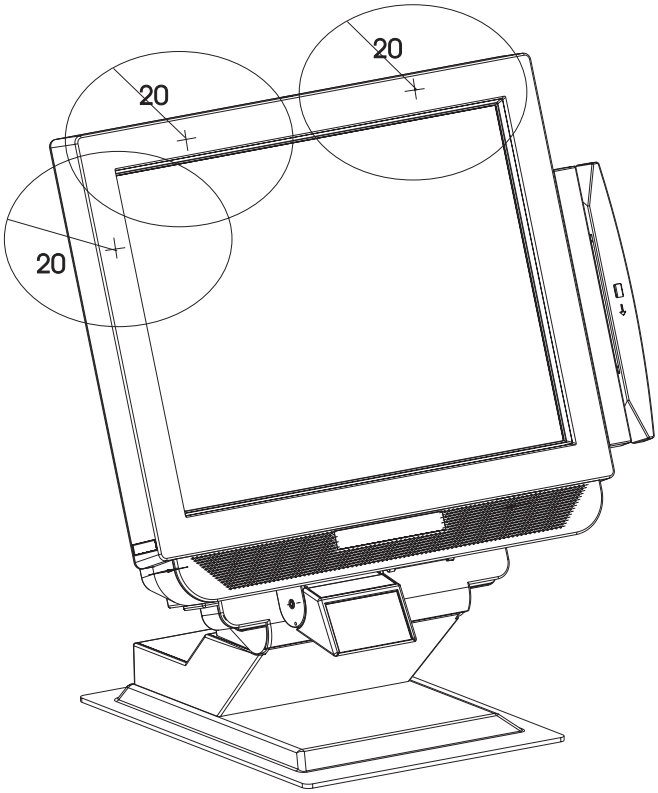

Figure 58. Antenna operating range

Interference statement

An improper installation or unauthorized use may cause harmful interference to radio communications. Also, any tampering with the internal antenna will void the FCC certification and your warranty. Refer to the Appendix: Electronic Emission notices in the User Manual for more detail.

Thailand 802.11bg wireless - Allowed frequencies and output power

This telecommunications equipment complies with NTC specification.

เครื่องโทรคมนาคมและอุปกรณ์นี้ มีความสอดคล้องตามข้อกำหนดของ กทช.

Canada – Industry Canada (IC) Low Power License-Exempt Radio Communication Devices (RSS-210)

Operation is subject to the following two conditions:

1. This device may not cause interference, and
2. This device must accept any interference, including interference that may cause undesired operation of the device.

Permis d'émission à faible puissance – Cas des appareils de communications radio (CNR-210)

L'utilisation de ce dispositif est autorisée seulement aux conditions suivantes:

1. il ne doit pas produire de brouillage et
2. l'utilisateur du dispositif doit être prêt à accepter tout brouillage radioélectrique reçu, même si ce brouillage est susceptible de compromettre le fonctionnement du dispositif.

Exposure of humans to RF fields (RSS-102)

IBM Anyplace Kiosk 4838 computers employ low gain integral antennas that do not emit RF field in excess of Health Canada limits for the general population; consult Safety Code 6, obtainable from Health Canada's Website at http://www.hc-sc.gc.ca/.

Exposition des êtes humains aux champs radioélectriques (RF) (CNR-102)

Le IBM Anyplace Kiosk 4838 computers utilise des antennes intégrales à faible gain qui némettent pas un champ électromagnétique supérieur aux normes imposées par le Ministére de la santé canadien pour la population. Consultez le Safety Code 6 sur le site Web du Ministére de la santé canadien à l'adresse http://www.hc-sc.gc.ca/.

Europe – EU declaration of conformity for IBM 11 a/b/g/n wireless LAN mini PCIe adapter – AR5BXB72

CE 0336

Products intended for sale within the European Union are marked with the Conformité Européenne (CE) Marking, which indicates compliance with the applicable Directives and European Norms, and amendments, identified below.

Atheros Communications, Inc. hereby declares that this IBM 802.11 a/b/g/n wireless LAN mini PCI adapter is in compliance with the essential requirements and other relevant provisions of Directive 1999/5/EC.
Atheros Communications, Inc. декларирам на своя отговорност, че далекосъобщително устройство IBM 802.11 a/b/g/n wireless LAN mini PCI adapter съответства на съществените изисквания по 1999/5/EC.
Atheros Communications, Inc. tímto prohlašuje, že IBM 802.11 a/b/g/n wireless LAN mini PCI adapter je ve shodě se základními požadavky a s dalšími příslušnými ustanoveními Nařízení 1999/5/ES.
Undertegnede Atheros Communications, Inc. erklærer herved, at følgende udstyr IBM 802.11 a/b/g/n wireless LAN mini PCI adapter overholder de væsentlige krav og øvrige relevante krav i direktiv 1999/5/EF.
Hierbij verklaart Atheros Communications, Inc. dat het toestel IBM 802.11 a/b/g/n wireless LAN mini PCI adapter in overeenstemming is met de essentiële eisen en de andere relevante bepalingen van richtlijn 1999/5/EG.
Bij deze verklaart Atheros Communications, Inc. dat deze IBM 802.11 a/b/g/n wireless LAN mini PCI adapter voldoet aan de essentiële eisen en aan de overige relevante bepalingen van Richtlijn 1999/5/EC.
Käesolevaga kinnitab Atheros Communications, Inc. seadme IBM 802.11 a/b/g/n wireless LAN mini PCI adapter vastavust direktiivi 1999/5/EÜ põhinõuetele ja nimetatud direktiivist tulenevatele teistele asjakohastele sätetele.
Atheros Communications, Inc. vakuuttaa täten että IBM 802.11 a/b/g/n wireless LAN mini PCI adapter tyyppinen laite on direktiivin 1999/5/EY oleellisten vaatimusten ja sitä koskevien direktiivin muiden ehtojen mukainen.

Par la présente, Atheros Communications, Inc. déclare que l'appareil IBM 802.11 a/b/g/n wireless LAN mini PCI adapter est conforme aux exigences essentielles et aux autres dispositions pertinentes de la directive 1999/5/CE.
Par la présente, Atheros Communications, Inc. déclare que ce IBM 802.11 a/b/g/n wireless LAN mini PCI adapter est conforme aux exigences essentielles et aux autres dispositions de la directive 1999/5/CE qui lui sont applicables.
Hiermit erklärt Atheros Communications, Inc., dass sich *dieser/diese/dieses* IBM 802.11 a/b/g/n wireless LAN mini PCI adapter in Übereinstimmung mit den grundlegenden Anforderungen und den anderen relevanten Vorschriften der Richtlinie 1999/5/EG befindet.
Hiermit erklärt Atheros Communications, Inc. die Übereinstimmung des Gerätes IBM 802.11 a/b/g/n wireless LAN mini PCI adapter mit den grundlegenden Anforderungen und den anderen relevanten Festlegungen der Richtlinie 1999/5/EG.
ΜΕ ΤΗΝ ΠΑΡΟΥΣΑ Atheros Communications, Inc. *ΔΗΛΩΝΕΙ ΟΤΙ* IBM 802.11 a/b/g/n wireless LAN mini PCI adapter *ΣΥΜΜΟΡΦΩΝΕΤΑΙ ΠΡΟΣ ΤΙΣ ΟΥΣΙΩΔΕΙΣ ΑΠΑΙΤΗΣΕΙΣ ΚΑΙ ΤΙΣ ΛΟΙΠΕΣ ΣΧΕΤΙΚΕΣ ΔΙΑΤΑΞΕΙΣ ΤΗΣ ΟΔΗΓΙΑΣ 1999/5/ΕΚ.*
Atheros Communications, Inc. ezennel kijelenti, hogy ez a IBM 802.11 a/b/g/n wireless LAN mini PCI adapter termék megfelel az alapvető követelményeknek és az 1999/5/EC irányelv más vonatkozó rendelkezéseinek.
Atheros Communications, Inc. lysir her med yfir að thessi bunadur, IBM 802.11 a/b/g/n wireless LAN mini PCI adapter, uppfyllir allar grunnkrofur, sem gerdar eru i R&TTE tilskipun ESB nr 1999/5/EC
Con la presente Atheros Communications, Inc. dichiara che questo IBM 802.11 a/b/g/n wireless LAN mini PCI adapter è conforme ai requisiti essenziali ed alle altre disposizioni pertinenti stabilite dalla direttiva 1999/5/CE.
Ar šo Atheros Communications, Inc. deklarē, ka IBM 802.11 a/b/g/n wireless LAN mini PCI adapter atbilst Direktīvas 1999/5/EK būtiskajām prasībām un citiem ar to saistītajiem noteikumiem.

Atheros Communications, Inc. deklaruoja, kad irenginys IBM 802.11 a/b/g/n wireless LAN mini PCIe adapter tenkina 1999/5/EB Direktyvos esminius reikalavimus ir kitas sios direktyvos nuostatas
Hawnhekk, Atheros Communications, Inc., jiddikjara li dan IBM 802.11 a/b/g/n wireless LAN mini PCI adapter jikkonforma mal-ħtiġijiet essenzjali u ma provvedimenti oħrajn relevanti li hemm fid-Dirrettiva 1999/5/EC.
Atheros Communications, Inc., deklarujemy z pełną odpowiedzialnością, że wyrób IBM 802.11 a/b/g/n wireless LAN mini PCI adapter spełnia podstawowe wymagania i odpowiada warunkom zawartym w dyrektywie 1999/5/EC.
Atheros Communications, Inc. declara que este IBM 802.11 a/b/g/n wireless LAN mini PCI adapter está conforme com os requisitos essenciais e outras provições da Directiva 1999/5/CE.
Atheros Communications, Inc. declară că aparatul IBM 802.11 a/b/g/n wireless LAN mini PCI adapter este în conformitate cu cerințele esențiale şi cu alte prevederi relevante ale otărârii Guvernului nr. 88/2003 (Directivei 1999/5/EC).
Atheros Communications, Inc. týmto vyhlasuje, že tento IBM 802.11 a/b/g/n wireless LAN mini PCI adapter vyhovuje technickým požiadavkám a ďalším ustanoveniam smernice 1999/5/ES, ktoré sa na tento výrobok vzťahujú.
S tem dokumentom Atheros Communications, Inc., izjavlja, da je ta IBM 802.11 a/b/g/n wireless LAN mini PCI adapter v skladu z bistvenimi zahtevami in z drugimi ustreznimi določili Direktive 1999/5/EC.
Por medio de la presente Atheros Communications, Inc. declara que el IBM 802.11 a/b/g/n wireless LAN mini PCI adapter cumple con los requisitos esenciales y cualesquiera otras disposiciones aplicables o exigibles de la Directiva 1999/5/CE.
Härmed intygar Atheros Communications, Inc. att denna IBM 802.11 a/b/g/n wireless LAN mini PCI adapter står I överensstämmelse med de väsentliga egenskapskrav och övriga relevanta bestämmelser som framgår av direktiv 1999/5/EG.

Important notice: Low Power IBM 802.11 a/b/g/n wireless LAN mini PCI adapter product operating in 2.4/5 GHz band for indoor use in Home and Office environment in EEA and Switzerland.

Důležité upozornění: Nízkovýkonný rádiový síťový produkt typu IBM 802.11 a/b/g/n wireless LAN mini PCI adapter určený pro provoz v pásmu 2.4/5 GHz uvnitř v domácím a kancelářském prostředí ve státech sdružených v EEA (Evropská agentura pro životní prostředí) a ve Švýcarsku.

Vigtig bemærkning: Strømbesparende LAN-produkt med en IBM 802.11 a/b/g/n wireless LAN mini PCI adapter a/b/g/n-radio, der opererer i 2,4/5-GHz båndet til indendørs hjemme- og kontorbrug EØS og Schweiz

Belangrijke kennisgeving: IBM 802.11 a/b/g/n wireless LAN mini PCI adapter radio LAN-product met laag vermogen, werkend in 2,4/5 GHz-banden, voor gebruik binnenshuis thuis of op kantoor in de E.E.A. en Zwitserland.

Oluline teadaanne. Standardile IBM 802.11 a/b/g/n wireless LAN mini PCI adapter vastav väikese väljundvõimsusega raadiokohtvõrgu seade, mis töötab 2,4/5 GHz sagedusalas ja on mõeldud kasutamiseks Euroopa Majanduspiirkonna riikides ning Šveitsis siseruumides (kodu- ja kontorikeskkonnas).

Tärkeä huomautus: Matalatehoinen 802.11 a/b/g/n-lähiverkkotuote toimii 2,4/5 GHz:n radiotaajuusalueella ja se on tarkoitettu koti- ja toimistokäyttöön Euroopan talousalueella ja Sveitsissä.

Avis important: Appareil réseau radio IBM 802.11 a/b/g/n wireless LAN mini PCI adapterà faible puissance fonctionnant dans la bande 2,4/5 GHz en intérieur et en environnement priv é ou professionnel dans l'EEE et en Suisse.

Wichtiger Hinweis: Im Europäischen Wirtschaftsraum und in der Schweiz werden Funk-LAN-Karten mit geringer Sendeleistung nach dem Standard IBM 802.11 a/b/g/n wireless LAN mini PCI adapterin geschlossenen Räumen am Heimarbeitsplatz und in Büroumgebungen im 2,4/5-GHz-Band betrieben.

Σημαντική σημείωση: Προϊόν IBM 802.11 a/b/g/n wireless LAN mini PCI adapter radio LAN χαμηλής ισχύος που λειτουργεί στο εύρος συχνοτήτων 2.4/5 GHz για εσωτερική χρήση σε περιβάλλον οικίας και γραφείου στον ΕΟΧ και την Ελβετία.

Fontos megjegyzés: Alacsony teljesítményű IBM 802.11 a/b/g/n wireless LAN mini PCI adapter rádiós LAN termék, amely 2,4/5 GHz-es frekvencián, beltéren működik otthoni és irodai környezetben az Európai Gazdasági Térség országaiban és Svájcban.

Áríðandi tilkynning: Lágafls IBM 802.11 a/b/g/n wireless LAN mini PCI adapter þráðlaust staðarnetstæki sem vinnur á 2,4/5 gígariða tíðnisviði til innanhúss nota á heimilum og skrifstofum innan EES og Sviss.

Informazioni importanti: prodotto LAN a radiofrequenza bassa IBM 802.11 a/b/g/n wireless LAN mini PCI adapter operante in una banda di 2,4/5 GHz per utilizzo esterno in ambienti domestici e in aziende nei paesi appartenenti all'EEA e Svizzera

Svarīgs paziņojums: mazjaudas IBM 802.11 a/b/g/n wireless LAN mini PCI adapter radio LAN produkts, kas darbojas 2,4/5 GHz frekvenču joslā un ir paredzēts lietošanai telpās mājas un biroja vidē EEA un Šveicē.

Svarbus pranešimas: Mažo galingumo IBM 802.11 a/b/g/n wireless LAN mini PCI adapter LAN radijo įrenginys, veikiantis 2,4/5 GHz dažnio bangomis namų ir biuro aplinkoje E.E.A ir Šveicarijoje.

Ważna informacja: jest to radiowy produkt LAN Low Power 802.11 a/b/g/n, działający w pasmach na częstotliwości 2.4/5 GHz, wykorzystywany w pomieszczeniach do użytku prywatnego i służbowego w Europejskim Obszarze Gospodarczym (E.E.A) i w Szwajcarii.

Aviso importante de 802.11 a/b/ g/n: Produto de rede local (LAN) de frequência rádio 802.802.11a/b/g/n de baixa tensão a operar em frequência de banda de 2,4/5 GHz para utilização em espaços fechados, em ambiente de casa e escritório no E.E.E. e na Suíça

Dôležité upozornenie: Produkt bezdrôtovej IBM 802.11 a/b/g/n wireless LAN mini PCI adapters nízkym výkonom na prevádzku v pásme 2,4/5 GHz pre domáce a kancelárske prostredie v EEA a Švajčiarsku.

Pomembno obvestilo: Radijski IBM 802.11 a/b/g/n wireless LAN mini PCI adapter izdelek z majhno močjo, ki deluje v frekvenčnem območju 2,4/5 GHz, za uporabo v zaprtih prostorih v domačem in pisarniškem okolju v EGP in Švici

Aviso importante: Producto de LAN de radio IBM 802.11 a/b/g/n wireless LAN mini PCI adapter de baja alimentación en funcionamiento en la banda de 2,4/5 GHz para el uso interior en entornos privados y de trabajo en EEA y Suiza.

Viktigt: Radio-LAN-produkten med låg effekt (IBM 802.11 a/b/g/n wireless LAN mini PCI adapter-standard) utnyttjar frekvensen 2,4/5 GHz och är avsedd att användas i hem- och kontorsmiljö i EEA-länder och Schweiz.

Важна забележка: IBM 802.11 a/b/g/n wireless LAN mini PCI adapter радио LAN продукт с ниска мощност, работещ в 2.4/5 GHz честотна лента за употреба на закрито в EEA и Швейцария.

Anunţ important: Produsul LAN prin unde radio cu consum scăzut IBM 802.11 a/b/g/n wireless LAN mini PCI adapter operează în banda 2,4/5 GHz pentru utilizarea în interior, acasă sau la birou, în EEA şi Elveţia

Declaration of Conformity

We, the undersigned,

Company	Atheros Communications, Inc.
Address, City	5480 Great America Parkway, Santa Clara, CA 95054
Country	U.S.A.
Phone number	1-408-773-5200
Fax number	1-408-773-9940

certify and declare under our sole responsibility that the following equipment:

Product description / Intended use	802.11a/b/g/n Wireless LAN PCIe Minicard
EU / EFTA member states intended for use	All Member Countries
Member states with restrictive use	See Enclosed User Instructions Regarding operation in 2.4 & 5GHz bands
Manufacturer	HON HAI Precision IND.CO.,LTD. & HONG FU JIN Precision Industry CO.,LTD.
Type	AR5BXB72

is tested to and conforms with the essential requirements for protection of health and the safety of the user and any other person and Electromagnetic Compatibility, as included in following standards:

Standard	Issue date
EN 301 489-17 Version 1.2.1	2002
EN 60950-1	2001

and is tested to and conforms with the essential radio test suites so that it effectively uses the frequency spectrum allocated to terrestrial/space radio communication and orbital resources so to as to avoid harmful interference, as included in following standards:

Standard	Issue date
EN 300 328 Version 1.7.1	Draft Standard 2006
EN 301 893 Version 1.3.1	Draft Standard 2005

and therefore complies with the essential requirements and provisions of the **Directive 1999/5/EC** of the European Parliament and of the council of March 9, 1999 on Radio equipment and Telecommunications Terminal Equipment and the mutual recognition of their conformity and with the provisions of Annex IV (Conformity Assessment procedure referred to in article 10). The device complies with the RF Exposure Requirement **1999/519/EC, COUNCIL RECOMMENDATION** of 12 July 1999 on the limitation of exposure of the general public to electromagnetic fields (0 Hz to 300 GHz).

The technical documentation as required by the Conformity Assessment procedure is kept at the following address:

Company	Redtree Solutions Limited
Address, City	PO Box 3445,Maidenhead,Berkshire,
Country	United Kingdom SL6 2YY
Phone number	+44 1628 580399
Fax number	+44 1628 580399
Contact	Andy Hull email: ahull@redtree solutions.com

Technical File ref. nr.	AR5BXB72-001
Drawn up in	Santa Clara
Date	29 August 2007
Michael Green	
Name and position	Michael Green, Manager Global Product Compliance

Croatia - wireless certification documents

IZJAVA O SUKLADNOSTI

U skladu s člankom 99. stavak 1. Zakona o telekomunikacijama (NN 122/2003)

IBM Hrvatska d.o.o.

ADRESA: Miramarska 23, 10000 Zagreb

MATIČNI BROJ SUBJEKTA (MBS): 080011422

Pod punom odgovornošću izjavljujemo da je R&TT oprema

OPIS OPREME:	Wireless kartica
TIPSKA OZNAKA OPREME:	AR5BXB72
MARKETINŠKO IME OPREME:	802.11a/b/g/n Wireless PCIe Minicard
PROIZVOĐAČ OPREME:	Atheros Communications

sukladna s bitnim zahtjevima iz članka 98. stavak 3. Zakona o telekomunikacijama, odnosno primjenjenim normama:

EN-60950-1
EN 300 489-17 v1.2.1
EN 301 893 v1.3.1
EN 300 328 v1.7.1

Zagreb, 02. siječanj 2008.
Mjesto i datum

IBM HRVATSKA d.o.o.
10000 Zagreb
Miramarska 23
1

Žig i potpis odgovorne osobe

Obrazac AG02002

REPUBLIKA HRVATSKA
HRVATSKA AGENCIJA ZA TELEKOMUNIKACIJE
Jurišićeva 13, p.p.162, 10 002 ZAGREB
Tel: (01) 489 60 00, (01) 458 17 21, Fax: (01) 492 02 27, http://www.telekom.hr
MB:1865862

POTVRDA O SUKLADNOSTI

CERTIFICATE OF CONFORMITY

Broj: SRD-RLAN-1130/07
No.:

Podnositelj zahtjeva: **IBM Hrvatska d.o.o.**
Applicant: Miramarska 23, 10000 Zagreb

Vrsta opreme: **IEEE 802.11 a/b/g/n WLAN PCIe kartica**
Equipment category: *IEEE 802.11 a/b/g/n WLAN PCIe MiniCard*

Tipska oznaka opreme: **Atheros AR5BXB72**
Equipment type designation:

Proizvođač opreme: **Atheros Communications, Inc.**
Equipment manufacturer: 5480 Great America Parkway, Santa Clara, CA 95054, U.S.A.

Dostavljena dokumentacija:
Submitted documentation:

Norme *Standards*	**Ispitni izvještaji ili certifikati** *Test reports or Certificates*	**Ispitni laboratorij** *Test laboratory*
IEC 60950-1:2001; EN 60950-1:2001;	**06U10365-11;**	**Compliance Certification Services Inc.;**
EN 301 489-1 v1.4.1:2002; EN 301 489-17 v1.2.1:2002;	**06U10365-8B;**	
EN 300 328 v1.7.1:2006;	**06U10365-6 Revision B;**	
Draft EN 301 893 V1.4.1:2005;	**06U10365-14, Revision B;**	

Nakon što je razmotrena dostavljena dokumentacija, utvrđeno je da je gore navedena oprema u skladu sa bitnim zahtjevima iz članka 98. stavak 3. Zakona o telekomunikacijama. Svu odgovornost za dostavljenu dokumentaciju snosi podnositelj zahtjeva.
After the submitted documentation has been considered, it is found that above mentioned equipment comply with essential requirements of Article 98., paragraph 3. of Telecommunications Act. All responsibility for the submitted documentation takes applicant.

Zagreb, 31.12.2007.
Mjesto i Datum
Place and Date

RAVNATELJ
HRVATSKE AGENCIJE ZA TELEKOMUNIKACIJE
Tonko Obuljen, dipl. ing. el.
Žig i potpis
Seal and Sign

REPUBLIKA HRVATSKA HRVATSKA AGENCIJA ZA TELEKOMUNIKACIJE ZAGREB

Glossary

This glossary includes terms and definitions from:

- *American National Standard Dictionary for Information Systems*, ANSI X3.172-1990, copyright 1990 by the American National Standards Institute (ANSI). Copies may be purchased from the American National Standards Institute, 11 West 42nd Street, New York, New York 10036. Definitions are identified by the symbol (A) after the definition.
- The *Information Technology Vocabulary*, developed by Subcommittee 1, Joint Technical Committee 1, of the International Organization for Standardization and the International Electrotechnical Commission (ISO/IEC JTC1/SC1). Definitions of published parts of this vocabulary are identified by the symbol (I) after the definition; definitions taken from draft international standards, committee drafts, and working papers being developed by ISO/IEC JTC1/SC1 are identified by the symbol (T) after the definition, indicating that final agreement has not yet been reached among the participating National Bodies of SC1.

A

active. (1) Able to communicate on the network. A token-ring network adapter is active if it is able to transmit and receive on the network (2) Operational. (3) Pertaining to a node or device that is connected or is available for connection to another node or device. (4) Currently transmitting or receiving.

adapter. (1) In the point-of-sale terminal, a circuit card that, with its associated software, enables the terminal to use a function or feature. (2) In a LAN, within a communicating device, a circuit card that, with its associated software and/or microcode, enables the device to communicate over the network.

address. (1) In data communication, the IEEE-assigned unique code or the unique locally administered code assigned to each device or workstation connected to a network. (2) A character or group of characters that identifies a register, a particular part of storage, or some other data source or destination. (A) (3) To refer to a device or an item of data by its address. (I) (A) (4) The location in the storage of a computer where data is stored.

addressing. (1) The assignment of addresses to the instructions of a program. (2) In data communication, the way in which a station selects the station to which it is to send data.

alphanumeric. Pertaining to data consisting of letters, digits, and usually other characters, such as punctuation marks. (T) (A)

analog. (1) Pertaining to data consisting of continuously variable physical quantities. (A) (2) Contrast with *digital*.

application. (1) A collection of one or more programs that work together to accomplish goals for a business. (2) A set of executable files and data files required to perform a desired function, which can consist of multiple programs running on different workstations.

architecture. A logical structure that encompasses operating principles including services, functions, and protocols. See *network architecture*.

attach. (1) To connect a device physically. (2) To make a device a part of a network logically. Compare with *connect*.

attaching device. Any device that is physically connected to a network and can communicate over the network.

B

bit. Either of the digits 0 or 1 when used in the binary numeration system. Synonymous with binary digit. (T)

bus. (1) In a processor, a physical facility on which data is transferred to all destinations, but from which only addressed destinations may read in accordance with appropriate conventions. (2) A network configuration in which nodes are interconnected through a bidirectional transmission medium. (3) One or more conductors used for transmitting signals or power. (A)

C

cash drawer. An optional I/O device attached to a point-of-sale terminal. The cash drawer contains a till. The cash drawer will open upon receiving a command. See *till*.

circuit. (1) A logic device. (2) One or more conductors through which an electric current can flow.

cluster. (1) A station that consists of a control unit (a cluster controller) and the terminals attached to it. (2) A group of APPN nodes that have the same network ID and the same topology database. A cluster is a subset of a NETID subnetwork. (3) In high-availability cluster multiprocessing (HACMP™), a set of independent systems (called nodes) that are organized into a network for the purpose of sharing resources and communicating with each other.

collision. (1) An unwanted condition that results from concurrent transmissions on a channel. (T) (2) When a frame from a transmitting adapter encounters any other signal in its path (frame, noise, or another type of signal), the adapter stops transmitting and a collision is registered.

command. (1) A request for performance of an operation or execution of a program. (2) A character string from a source external to a system that represents a request for system action.

component. (1) Any part of a network other than an attaching device, such as an IBM 8228 Multistation Access Unit. (2) Hardware or software that is part of a functional unit.

configuration. (1) The devices and programs that make up a system, subsystem, or network. (A) See also *system configuration*. (2) In the IBM StorePlace Distributed Data Services for OS/2, program options that are initially set at installation, and that can be changed later. Changing these options requires an IPL. These changes must be performed by a programmer or store operations personnel. These options are used to tune the product's use of the operating system and system resources.

connect. In a LAN, to physically join a cable from a station to an access unit or network connection point. Contrast with *attach*.

controller. A unit that controls input/output operations for one or more devices.

cursor. A movable point of light (or a short line) that indicates where the next character is to be entered on the display screen.

D

data. (1) A representation of facts, concepts, or instructions in a formalized manner suitable for communication, interpretation, or processing by human or automatic means. (I) (A) (2) Any representations such as characters or analog quantities to which meaning is or might be assigned. (A)

data file. A collection of related data records organized in a specific manner; for example, a payroll file (one record for each employee, showing such information as rate of pay and deductions) or an inventory file (one record for each inventory item, showing such information as cost, selling price, and number in stock.) See also *data set*, *file*.

data processing system. A system, including computer systems and associated personnel, that performs input, processing, storage, output, and control functions to accomplish a sequence of operations on data. (A) (I)

data set. Logically related records treated as a single unit. See also *file*.

DBCS. See *double-byte character set*.

device. (1) A mechanical, electrical, or electronic contrivance with a specific purpose. (2) An input/output unit such as a terminal, display, or printer. See also *attaching device*.

diagnostic diskette. A diskette containing diagnostic modules or tests used by computer users and service personnel to diagnose hardware problems.

diagnostics. Modules or tests used by computer users and service personnel to diagnose hardware problems.

digital. (1) Pertaining to data in the form of digits. (A) Contrast with *analog*. (2) Pertaining to data consisting of numerical values or discrete units.

DIP switch. A two-position switch on a circuit board that is preset to control certain functions. The user can change the position of a DIP switch to satisfy special requirements.

disk. A round, flat, data medium that is rotated in order to read or write data. (T) See also *diskette*, *hard-disk drive*.

disk operating system (DOS). A computer operating system that can perform only one task at a time.

diskette. A thin, flexible magnetic disk permanently enclosed in a protective jacket. A diskette is used to store information for processing.

diskette drive. The mechanism used to seek, read, and write data on diskettes.

display. (1) A visual presentation of data. (2) A device that presents visual information to the point-of-sale terminal operator and to the customer.

distributed. Physically separate but connected by cables.

DOS. See *disk operating system*.

double-byte character set (DBCS). A set of characters in which each character is represented by 2 bytes. Languages such as Japanese, Chinese, and Korean, which contain more symbols than can be represented by 256 code points, require double-byte character sets. Because each character requires 2 bytes, the typing,

display, and printing of DBCS characters requires hardware and programs that support DBCS. Contrast with *single-byte character set*.

DRAM. Dynamic RAM. See *RAM*.

driver. A software component that controls a device.

dump. (1) To record, at a particular instant, the contents of all or part of one storage device in another storage device. Dumping is usually for the purpose of debugging. (T) (2) Data that has been dumped. (T)

DVD-ROM. Digital-video-disk read-only memory.

E

error message. A message that is issued because an error has been detected.

F

FCC. See *Federal Communications Commission.*

feature. A part of an IBM product that may be ordered separately by the customer.

Federal Communications Commission (FCC). A board of commissioners appointed by the President under the Communications Act of 1934, having the power to regulate all interstate and foreign communications by wire and radio originating in the United States.

field. On a data medium or a storage medium, a specified area used for a particular category of data; for example, a group of character positions used to enter or display wage rates on a panel. (T)

file. A named set of records stored or processed as a unit. (T) For example, an invoice may form a record and the complete set of such records may form a file. See also *data set*.

flash memory. A data-storage device that is programmable, erasable, and does not require continuous power. The chief benefit of flash memory over other programmable and erasable data storage devices is that it can be reprogrammed without being removed from the circuit board.

formatted diskette. A diskette on which track and sector control information has been written and that can be used by the computer to store data. **Note:** A diskette must be formatted before it can receive data.

frame . (1) The unit of transmission in some LANs, including the IBM Token-Ring Network and the IBM PC Network. It includes delimiters, control characters, information, and checking characters. On a token-ring network, a frame is created from a token when the token has data appended to it. On a token-bus network (IBM PC Network), all frames including the token frame contain a preamble, start delimiter, control address, optional data and checking characters, end delimiter, and are followed by a minimum silence period. (2) A housing for system elements. (3) In synchronous data link control (SDLC), the vehicle for every command, every response, and all information that is transmitted using SDLC procedures. Each frame begins and ends with a flag.

function. (1) A specific purpose of an entity, or its characteristic action. (A) (2) In data communications, a system action such as a carriage return or line feed. (A)

H

hard-disk drive. In a personal computer system unit, a disk storage device that reads and writes on rigid magnetic disks. It is faster and has a larger storage capacity than a diskette and is permanently installed. Synonymous with *fixed disk*.

HID. See *human interface devices*.

hot pluggable. Refers to a hardware component that can be installed or removed without disturbing the operation of any other resource that is not connected to, or dependent on, this component.

human interface devices (HID). Devices which allow humans to interact and communicate with a computer. Examples are a keyboard or a mouse.

hot plugging. Process of installing connections to the serial bus while the system is running and without powering down.

hot unplugging. Process of removing connections from the serial bus while the system is running and without powering down.

hypertext. (1) A method of presenting text in discrete units, or nodes, that are connected by links for navigation. (2) Text designed to be read or accessed in a nonlinear manner using nodes that are connected by links for navigation.

I

I/O. See *input/output*.

I/O device. A device in a data processing system by means of which data can be entered into the system, received from the system, or both. (I) (A)

IBM Disk Operating System (DOS) . A disk operating system based on MS-DOS that operates with all IBM-compatible personal computers.

IEEE. Institute of Electrical and Electronics Engineers.

input/output (I/O). (1) Pertaining to a device whose parts can perform an input process and an output process at the same time. (I) (2) Pertaining to a functional unit or channel involved in an input process, output process, or both, concurrently or not, and to the data involved in such a process.

integrated. Arranged together as one unit.

interference. (1) The prevention of clear reception of broadcast signals. (2) The distorted portion of a received signal.

interrupt. (1) A suspension of a process, such as execution of a computer program, caused by an external event and performed in such a way that the process can be resumed. (A) (2) To stop a process in such a way that it can be resumed. (3) A means of passing processing control from one software or microcode module or routine to another, or of requesting a particular software, microcode, or hardware function.

J

jabber. Transmission by a data station beyond the time interval allowed by the protocol. (T)

K

K. When referring to storage capacity, a symbol that represents two to the tenth power, or 1024.

keyboard. A group of numeric keys, alphabetic keys, special character keys, or function keys used for entering information into the terminal and into the system.

L

LAN. See *local area network*.

LAN adapter. The circuit card within a communicating device (such as a personal computer) that, together with its associated software, enables the device to be attached to a LAN.

LCD. Liquid crystal display

LED. Light-emitting diode.

light-emitting diode (LED). A semiconductor chip that gives off visible or infrared light when activated.

line. On a terminal, one or more characters entered before a return to the first printing or display position.

link. (1) The logical connection between nodes including the end-to-end link control procedures. (2) The combination of physical media, protocols, and programming that connects devices on a network. (3) In computer programming, the part of a program, in some cases a single instruction or an address, that passes control and parameters between separate portions of the computer program. (4) To interconnect items of data or portions of one or more computer programs. (5) In SNA, the combination of the link connection and link stations joining network nodes. See also *link connection*. **Note:** A link connection is the physical medium of transmission; for example, a telephone wire or a microwave beam. A link includes the physical medium of transmission, the protocol, and associated devices and programming; it is both logical and physical.

link connection. (1) All physical components and protocol system s that lie between the communicating link stations of a link. The link connection may include a switched or leased physical data circuit, a LAN, or an X.25 virtual circuit. (2) In SNA, the physical equipment providing two-way communication and error correction and detection between one link station and one or more other link stations. (3) In the IBM Store System, the logical link providing two-way communication of data from one network node to one or more other network nodes.

load. In computer programming, to enter data into memory or working registers.

local area network (LAN). A computer network located on a user's premises within a limited geographical area. **Note:** Communication within a LAN is not subject to external regulations; however, communication across the LAN boundary may be subject to some form of regulation.

logon. The procedure for starting up a point-of-sale terminal or store controller for normal sales operations by sequentially entering the correct security number and transaction number. Synonymous with *sign-on*.

M

magnetic ink character reader (MICR). An input unit that reads characters by magnetic ink character recognition. (A)

magnetic ink character recognition. (1) MICR. Character recognition of magnetic ink characters. (T) (2) The identification of characters through the use of magnetic ink.

MB. See *megabyte*.

Mbps. One million bits per second.

megabyte (MB) . A unit of measure for data. 1 megabyte = 1 048 576 bytes.

memory. Program-addressable storage from which instructions and other data can be loaded directly into registers for subsequent execution or processing.

message. (1) An arbitrary amount of information whose beginning and end are defined or implied. (2) A group of characters and control bit sequences transferred as an entity. (3) In telecommunication, a combination of characters and symbols transmitted from one point to another. (4) A logical partition of the user device's data stream to and from the adapter. See also *error message*, *operator message*.

MICR. See magnetic ink character reader and magnetic ink character recognition.

module. A program unit that is discrete and identifiable with respect to compiling, combining with other units, and load; for example, the input to, or output from, an assembler, compiler, linkage editor, or executive routine.

N

network. (1) A configuration of data processing devices and software connected for information interchange. (2) An arrangement of nodes and connecting branches. Connections are made between data stations.

network architecture. The logical structure and operating principles of a computer network. **Note:** The operating principles of a network include those of services, functions, and protocols.

nit. A nit is a unit of luminance equal to one candela per square meter. It is often used to quote the brightness of computer displays.

noise. (1) A disturbance that affects a signal and that can distort the information carried by the signal. (2) Random variations of one or more characteristics of any entity, such as voltage, current, or data. (3) Loosely, any disturbance tending to interfere with normal operation of a device or system.

nonvolatile random access memory (NVRAM) . Random access memory that retains its contents after electrical power is shut off. Contrast with *volatile memory*.

NVRAM. See nonvolatile random access memory.

O

operating system. Software that controls the execution of programs and that may provide services such as resource allocation, scheduling, input/output control, and data management. Although operating systems are predominantly software, partial hardware implementations are possible. (T)

operator. A person who operates a system .

operator message. A message from the operating system or a program telling the operator to perform a specific function or informing the operator of a specific condition within the system, such as an error condition.

option. (1) A specification in a statement, a selection from a menu, or a setting of a switch, that can be used to influence the execution of a program. (2) A hardware or software function that can be selected or enabled as part of a configuration process. (3) A piece of hardware (such as a network adapter) that can be installed in a device to modify or enhance device function.

OS. Operating system.

P

page. The information displayed at the same time on the screen of a display device.

panel. (1) A thin flat sheet, usually (a) of pressed metal and carrying controls and indicators, (b) of glass, or (c) of plastic. (2) A formatted display of information that appears on a display screen.

parallel port. A port that transmits the bits of a byte in parallel along the lines of the bus, one byte at a time, to an I/O device. On a personal computer, it is used to connect a device that uses a parallel interface, such as a dot matrix printer, to the computer. Contrast with *serial port*.

PC. See *personal computer*.

personal computer (PC). A desktop, free-standing, or portable microcomputer that usually consists of a system unit, a display, a keyboard, one or more diskette drives, internal fixed-disk storage, and an optional printer. PCs are designed primarily to give independent computing power to a single user and are inexpensively priced for purchase by individuals or small businesses.

plug. (1) A connector for attaching wires from a device to a cable, such as a store loop. A plug is inserted into a receptacle or plug. (2) To insert a connector into a receptacle or socket.

Plug and Play (PnP). Pertaining to the capability of a hardware or software component to be installed on a system with minimal effort and to be available for use immediately thereafter.

PnP. See *Plug and Play*.

point-of-sale (POS). A method of providing information to support sales and of collecting the resulting sales information from retail devices located in stores.

port. (1) An access point for data entry or exit. (2) A connector on a device to which cables for other devices such as display stations and printers are attached. Synonymous with *socket*.

POS. See *point-of-sale*.

POST . Power-on self-test.

power-on self-test (POST) . A series of diagnostic tests that are run automatically each time the computer's power is switched on.

problem determination. The process of determining the source of a problem; for example, a program component, system failure, telecommunication facilities, user or contractor-installed programs or equipment, environmental failure such as a power loss, or user error.

procedure. (1) A set of related control statements that cause one or more programs to be performed. (2) A set of instructions that gives a service representative a step-by-step procedure for tracing a symptom to the cause of failure.

processor. In a computer, a functional unit that interprets and executes instructions. (A) (I)

protocol. (1) A set of semantic and syntactic rules that determine the behavior of functional units in achieving communication. (I) (2) A specification for the format and relative timing of information exchanged between communicating parties.

R

RAM. See *random access memory*.

random access memory (RAM). A computer's or adapter's volatile memory, which can be accessed nonsequentially.

read. To acquire or to interpret data from a storage device, from a data medium, or from another source. (I) (A)

real-time. (1) Pertaining to the actual time during which a physical process occurs. (2) Pertaining to data collected concurrently with physical events, so that the results of the collection operation may be used to influence the sequence of events.

receive. To obtain and store information transmitted from a device.

record. A collection of related items of data, treated as a unit; for example, in stock control, each invoice could constitute one record. A complete set of such records may form a file.

repeater. A device that amplifies or regenerates data signals in order to extend the range of transmission between devices in a network.

S

SBCS. See *single-byte character set*.

scanner. A device that examines the bar code on merchandise tickets, credit cards, and employee badges and generates analog or digital signals corresponding to the bar code.

serial port. On personal computers, a port used to attach devices such as display devices, letter-quality printers, modems, plotters, and pointing devices such as light pens and mice; it transmits data one bit at a time. Contrast with *parallel port*.

signal. A variation of a physical attribute, used to convey data. (A)

single-byte character set (SBCS). Single-byte character set. A character set in which each character is represented by a one-byte code. Contrast with *double-byte character set*.

socket. (1) An opening that holds something. (2) Synonym for *port*.

source. The origin of any data involved in a data transfer.

subsystem. A secondary or subordinate system, usually capable of operating independently of, or asynchronously with, a controlling system. (T)

switch. (1) A device for making and breaking electrical connections, for making a selection, or for requesting a function or operation. (2) On an adapter, a mechanism used to select a value for, enable, or disable a configurable option or feature.

system. In data processing, a collection of people, system s, and methods organized to accomplish a set of specific functions. (I) (A) See also *data processing system*, *operating system*, and *system unit*.

system board. In a system unit, the main circuit board that supports a variety of basic system devices, such as a keyboard or a mouse, and provides other basic system functions.

system configuration. A process that specifies the devices and programs that form a particular data processing system.

system unit. (1) A part of a computer that contains the processing unit and may contain devices such as disk and diskette drives. (2) In an IBM Personal Computer, the unit that contains the processor circuitry, read-only memory (ROM), random access memory (RAM), and the I/O channel. It may have one or more disk or diskette drives. (3) In an IBM Store System terminal, the part of the terminal that contains the processing unit, ROM, RAM, disk and diskette drives, and the I/O channel.

T

terminal. In data communication, a device, usually equipped with a keyboard and a display, that is capable of sending and receiving information.

till. A tray in the cash drawer of the point-of-sale terminal, used to keep the different denominations of bills and coins separated and easily accessible.

transmit. To send information from one place for reception elsewhere. (A)

twisted pair. A transmission medium that consists of two insulated electrical conductors twisted together. (A)

typematic. The ability of a key on a keyboard to repeatedly type a character as long as it is held down.

U

Universal Serial Bus (USB). A serial interface standard for telephony and multimedia connections to personal computers.

Universal Serial Bus (USB), powered. A powered-USB connector provides additional power from the host system. A powered-USB receptacle consists of two connectors stacked vertically inside the common housing. The upper connector contains four contacts that are used for powering the attached device.

unshielded twisted pair (UTP). One or more twisted pairs of copper wire in the unshielded voice-grade cable commonly used to connect a telephone to its wall jack.

user. (1) A category of identification defined for file access protection. (2) A person using a program or system.

USB. See *Universal Serial Bus*.

V

version . A separately licensed program that usually has significant new code or new function.

vital product data (VPD). Information about the computer, such as system type and model or serial number, stored in the BIOS.

volatile memory. Memory that loses its contents when power is turned off.

VPD. See *vital product data*.

Index

Part number index

Readers' Comments — We'd Like to Hear from You

IBM AnyPlace Kiosk 4838
Planning, Installation, and Service Guide for Models 5xx, 7xx, and 9xx

Publication No. GA27-4369-01

We appreciate your comments about this publication. Please comment on specific errors or omissions, accuracy, organization, subject matter, or completeness of this book. The comments you send should pertain to only the information in this manual or product and the way in which the information is presented.

For technical questions and information about products and prices, please contact your IBM branch office, your IBM business partner, or your authorized remarketer.

When you send comments to IBM, you grant IBM a nonexclusive right to use or distribute your comments in any way it believes appropriate without incurring any obligation to you. IBM or any other organizations will only use the personal information that you supply to contact you about the issues that you state on this form.

Comments:

Thank you for your support.

Send your comments to the address on the reverse side of this form.

If you would like a response from IBM, please fill in the following information:

Name	Address
Company or Organization	
Phone No.	Email address

Readers' Comments — We'd Like to Hear from You
GA27-4369-01

IBM

Cut or Fold
Along Line

Fold and Tape | **Please do not staple** | Fold and Tape

NO POSTAGE
NECESSARY
IF MAILED IN THE
UNITED STATES

BUSINESS REPLY MAIL

FIRST-CLASS MAIL PERMIT NO. 40 ARMONK, NEW YORK

POSTAGE WILL BE PAID BY ADDRESSEE

IBM Corporation
Retail Store Solutions Information Development
Dept. ZBDA
P. O. Box 12195
RESEARCH TRIANGLE PARK NC 27709-9990

Fold and Tape | **Please do not staple** | Fold and Tape

GA27-4369-01

Cut or Fold
Along Line

GA27-4369-01